9. Flow Chart of TroubleShooting

9-1. Power On

- **PDA Part**

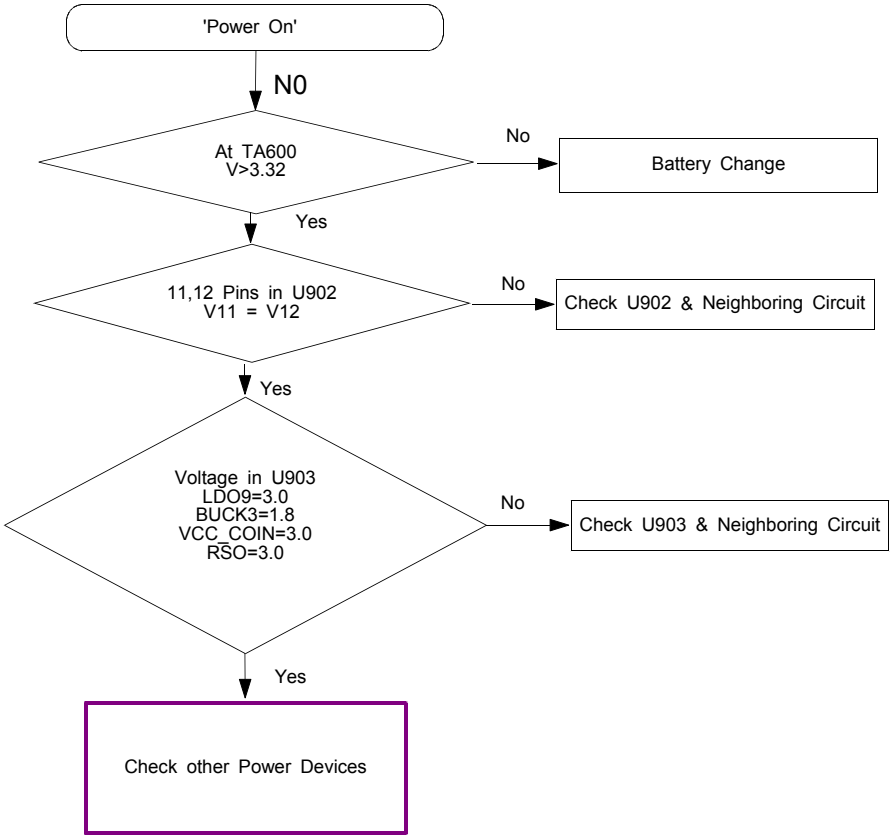

SAMSUNG Proprietary-Contents may change without notice
This Document can not be used without Samsung's authorization

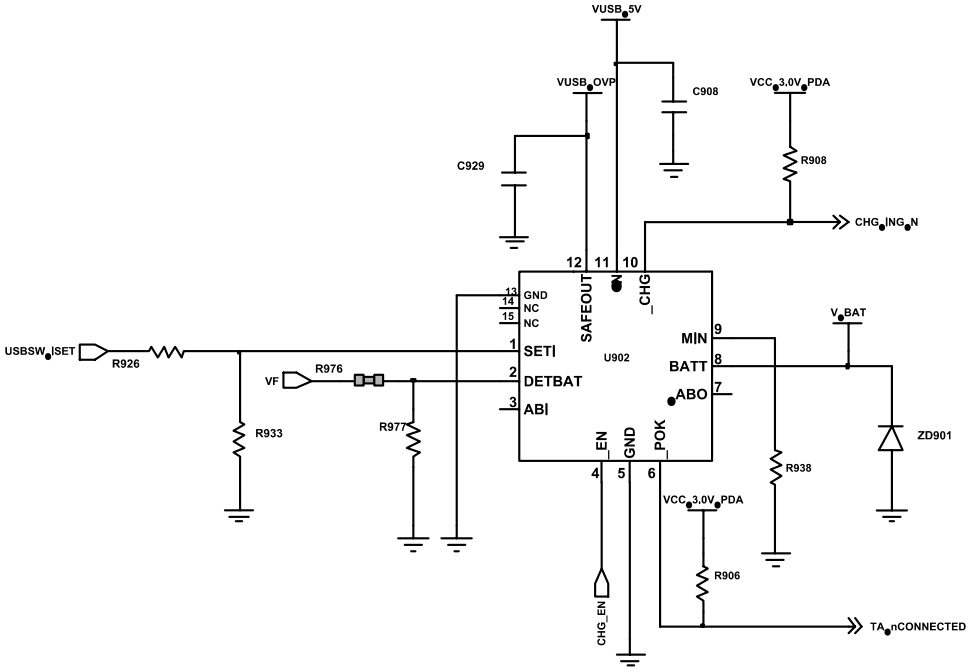

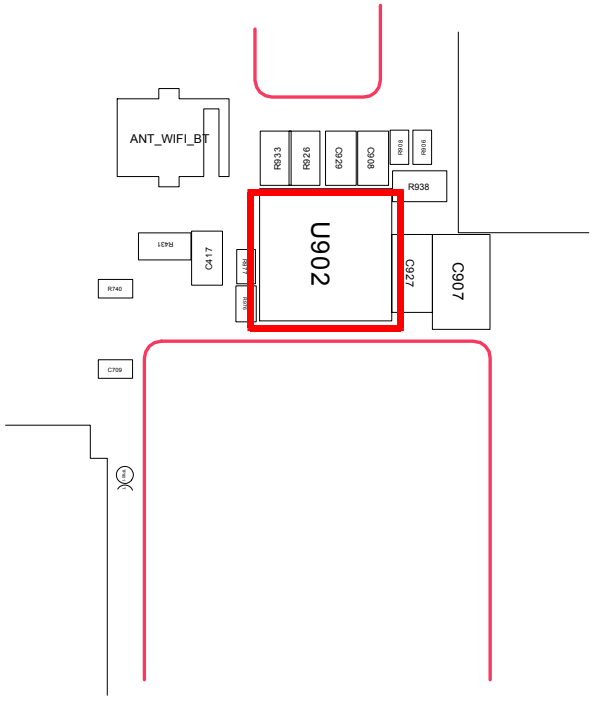

SAMSUNG Proprietary-Contents may change without notice
This Document can not be used without Samsung's authorization

● PHONE Part

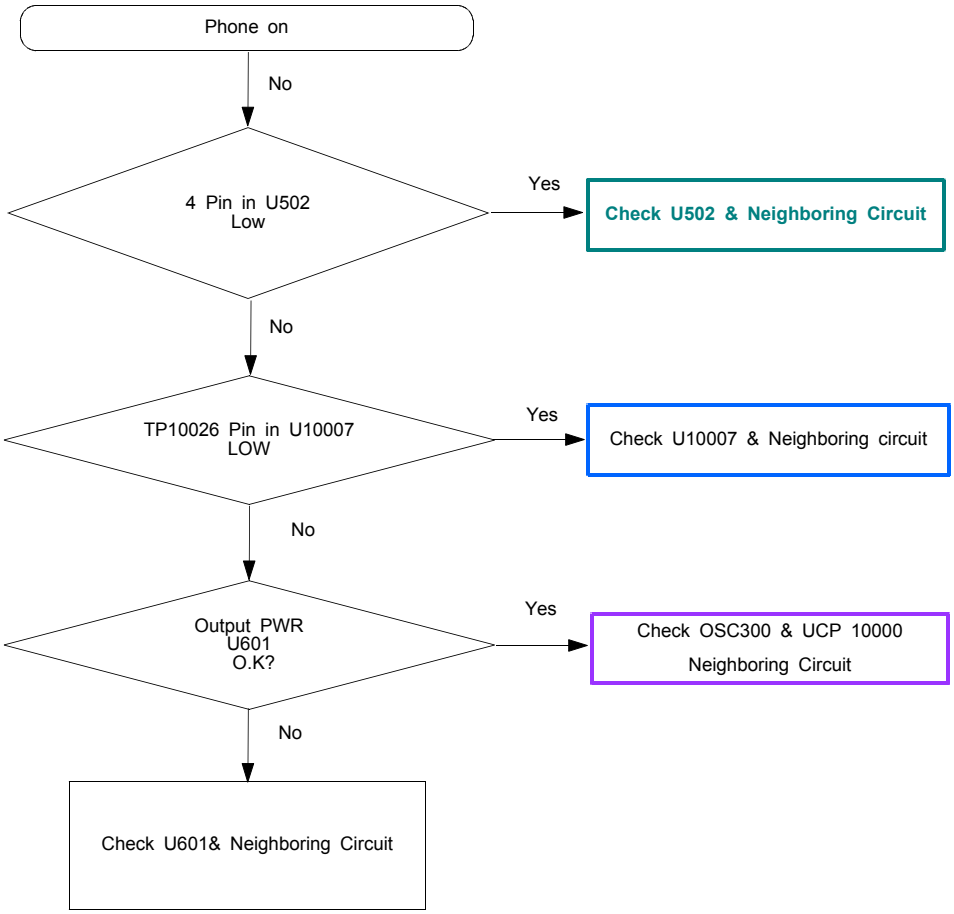

SAMSUNG Proprietary-Contents may change without notice
This Document can not be used without Samsung's authorization

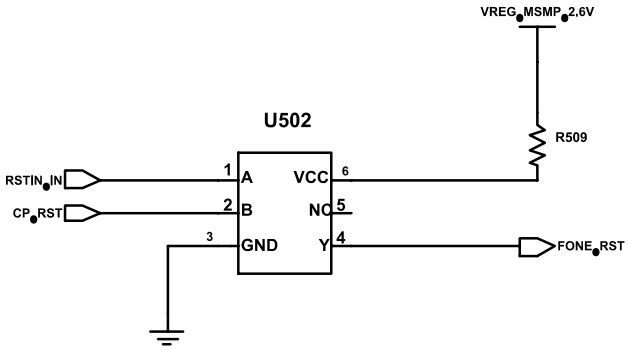

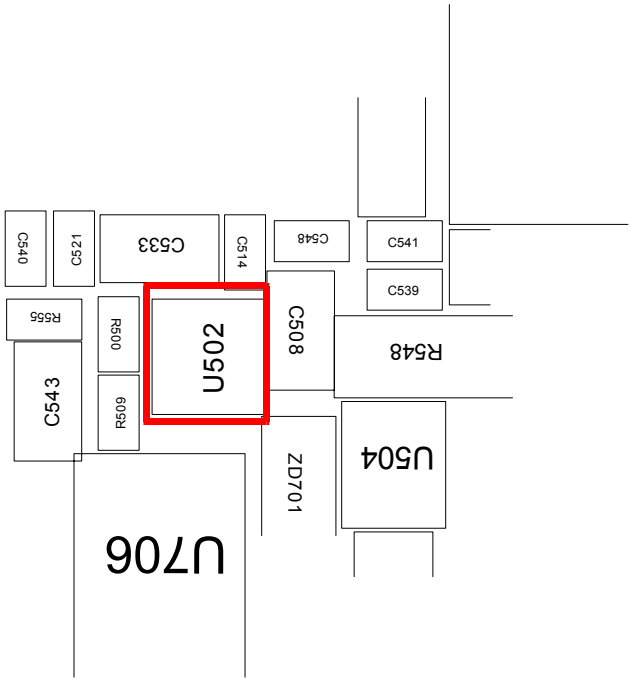

SAMSUNG Proprietary-Contents may change without notice
This Document can not be used without Samsung's authorization

9-2. RECEIVER Working

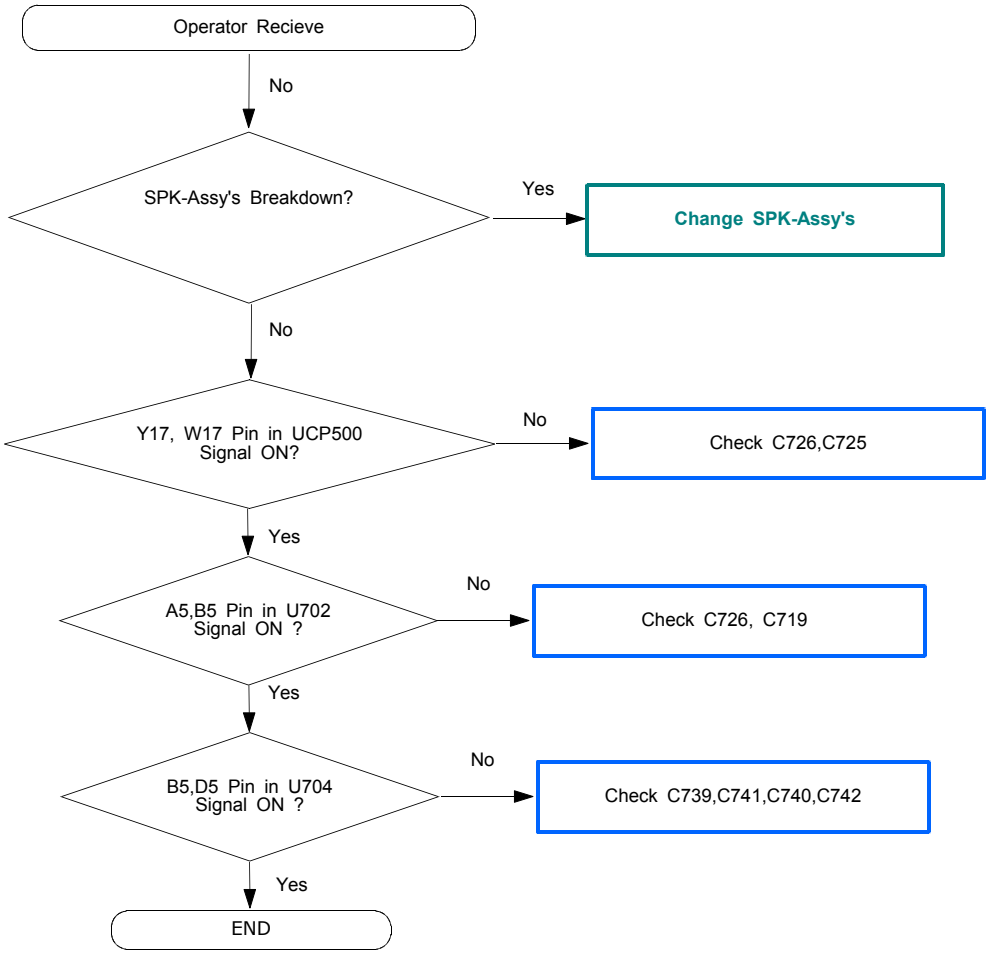

SAMSUNG Proprietary-Contents may change without notice
This Document can not be used without Samsung's authorization

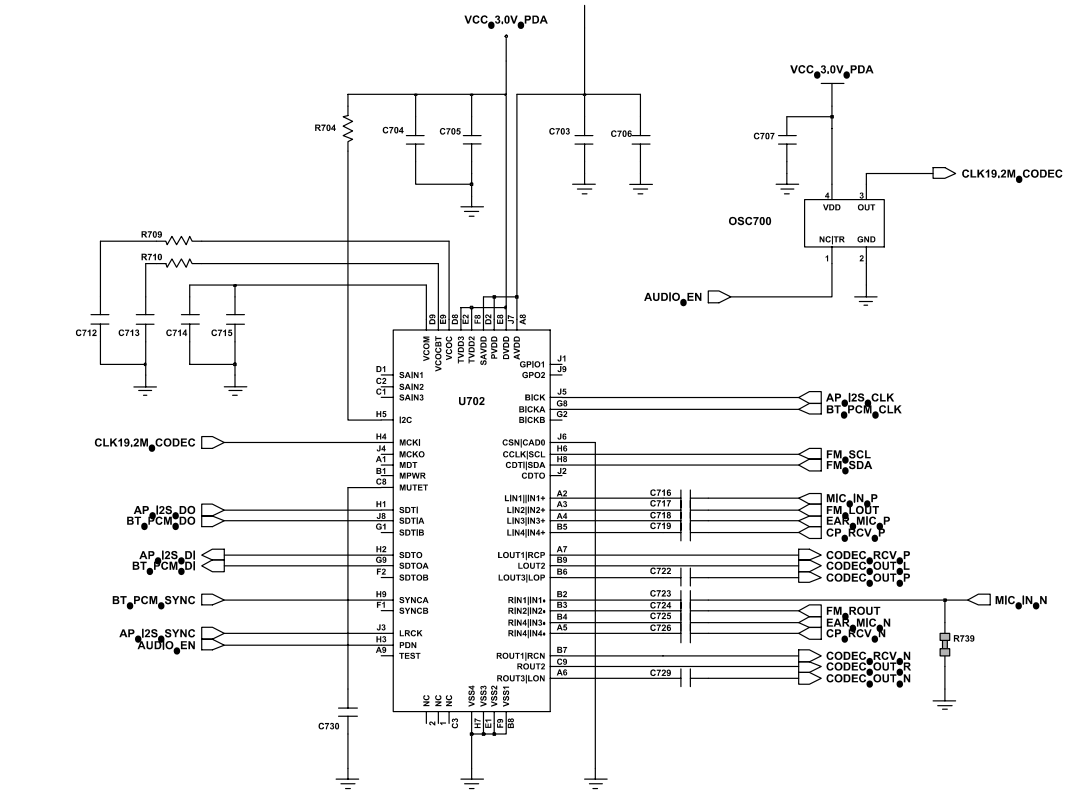

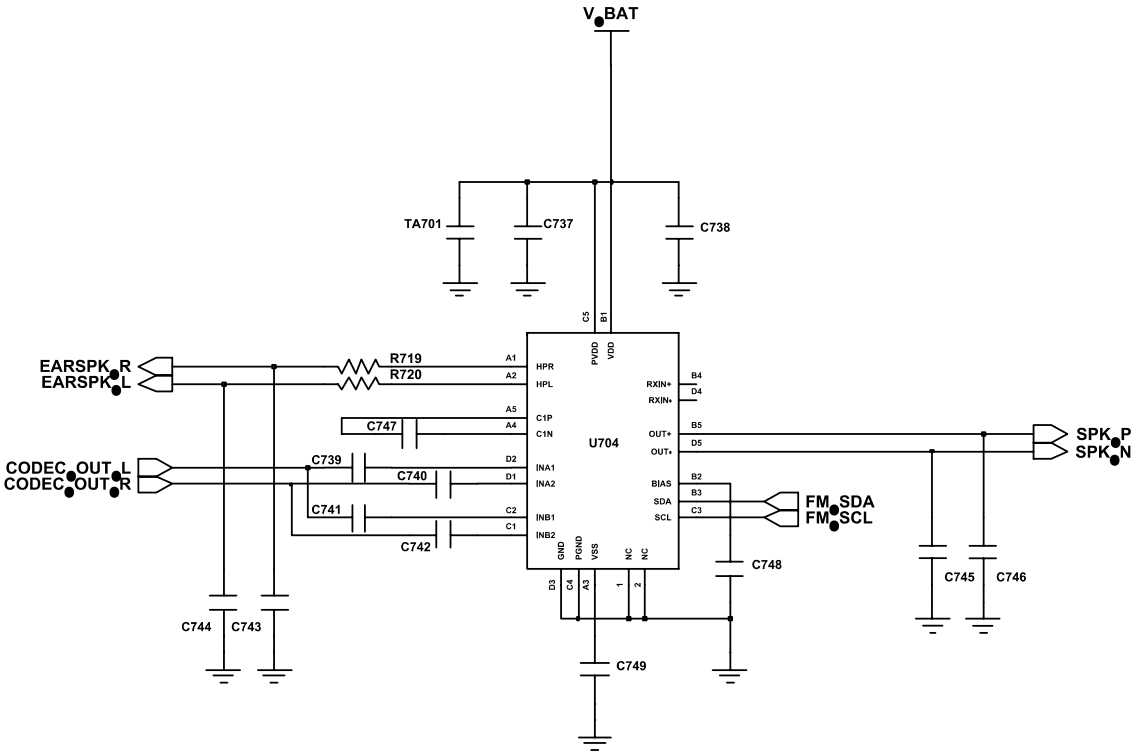

SAMSUNG Proprietary-Contents may change without notice
This Document can not be used without Samsung's authorization

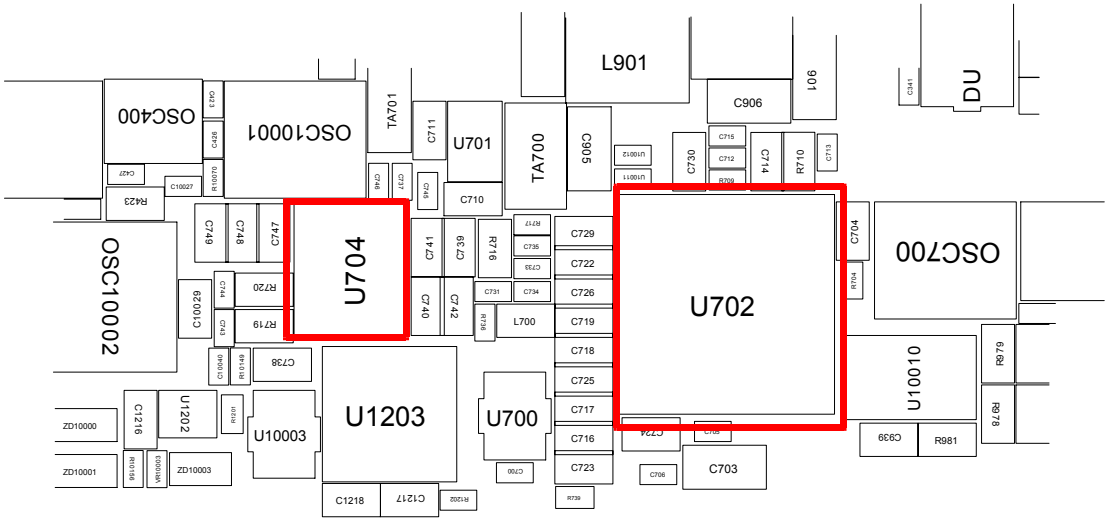

SAMSUNG Proprietary-Contents may change without notice
This Document can not be used without Samsung's authorization

9-3. SPEAKER Working

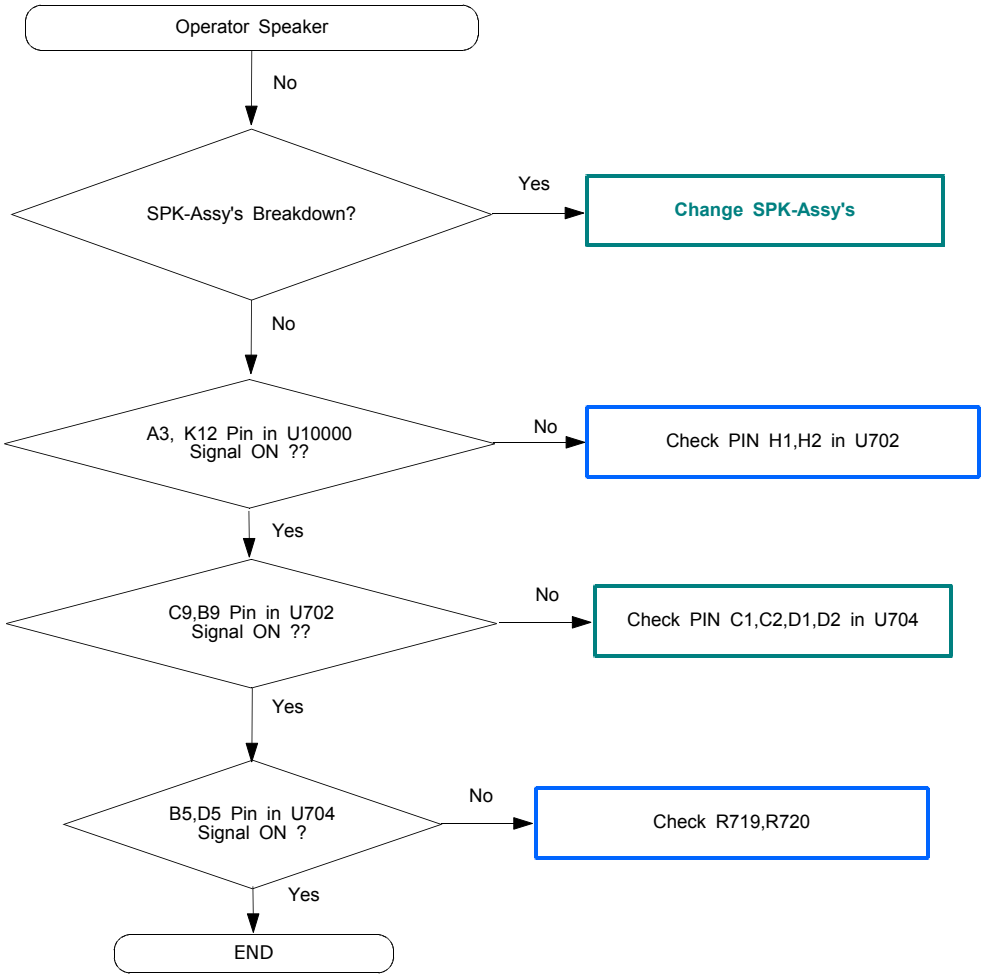

SAMSUNG Proprietary-Contents may change without notice
This Document can not be used without Samsung's authorization

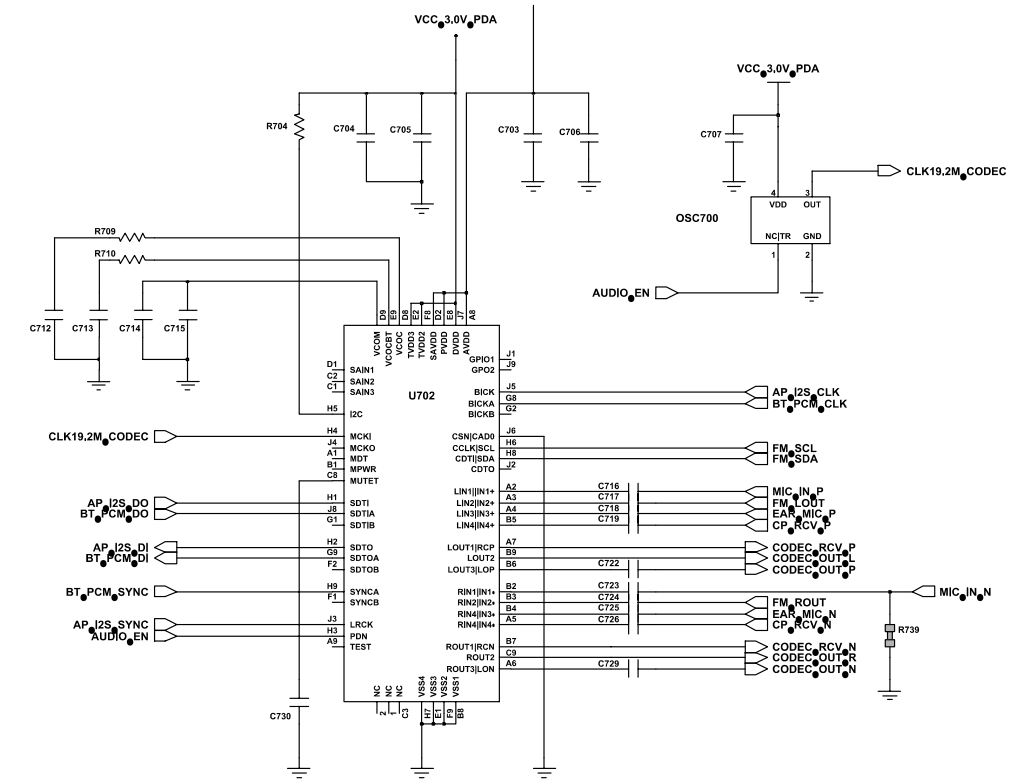

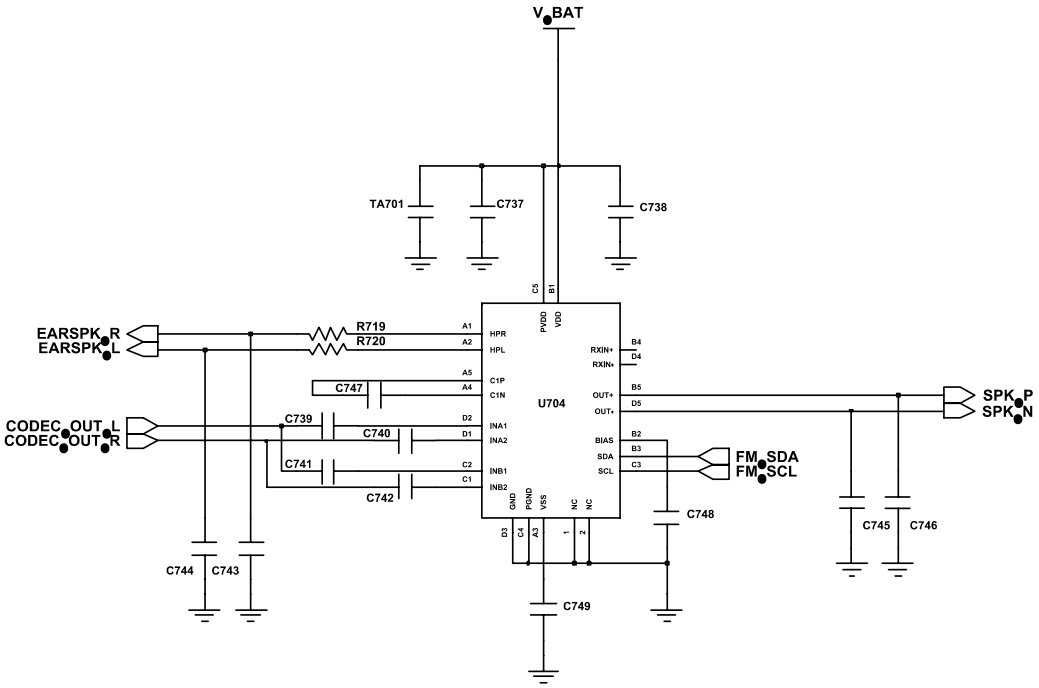

SAMSUNG Proprietary-Contents may change without notice
This Document can not be used without Samsung's authorization

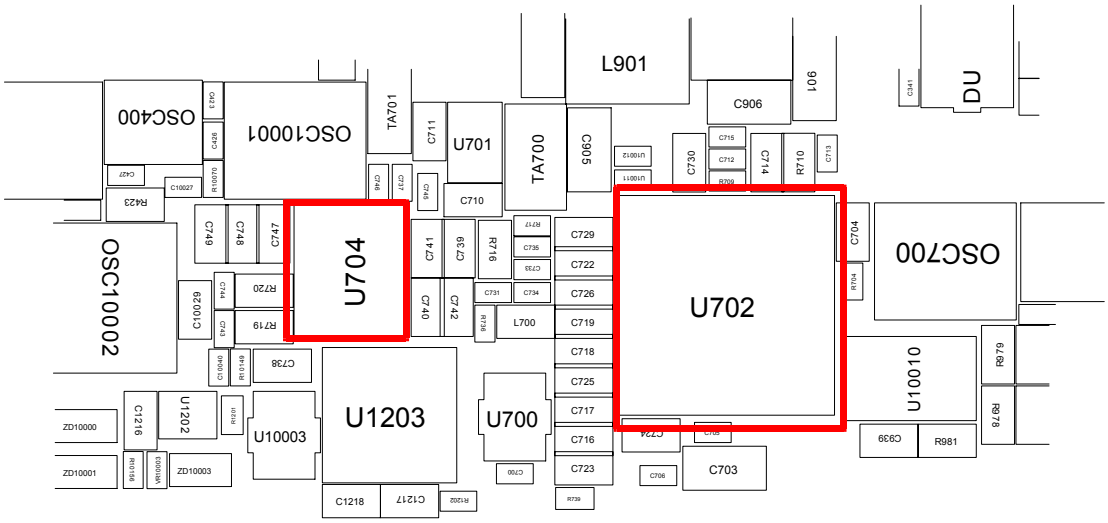

SAMSUNG Proprietary-Contents may change without notice
This Document can not be used without Samsung's authorization

9-4. MIC Working

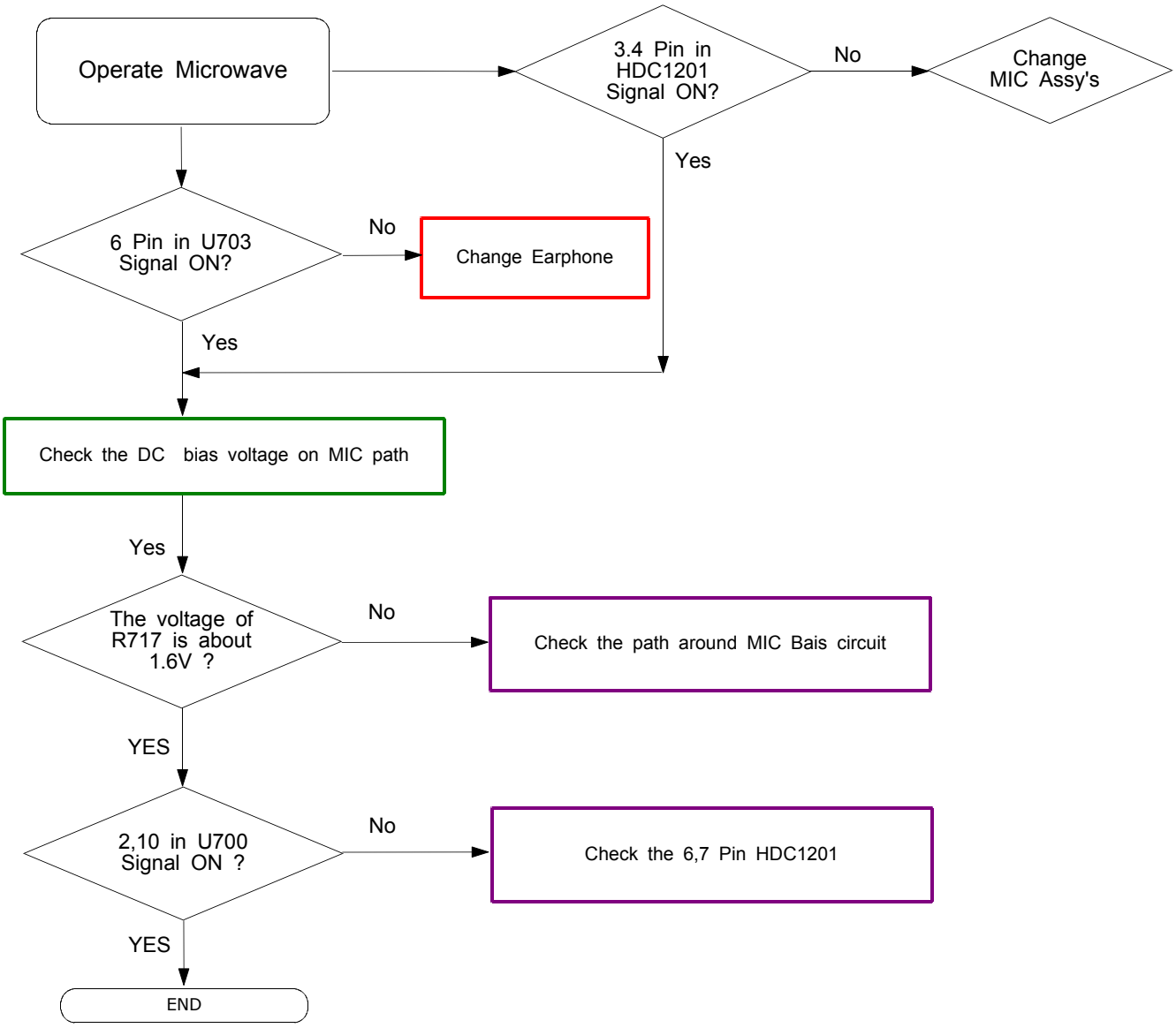

SAMSUNG Proprietary-Contents may change without notice
This Document can not be used without Samsung's authorization

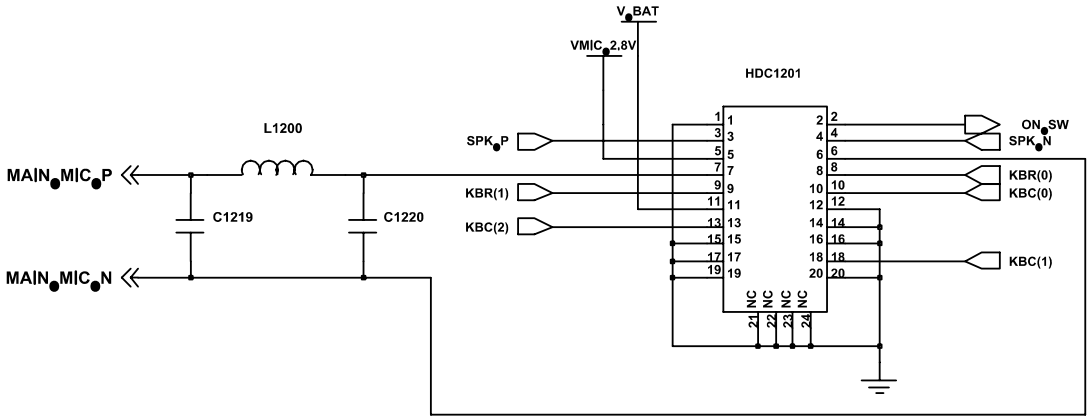

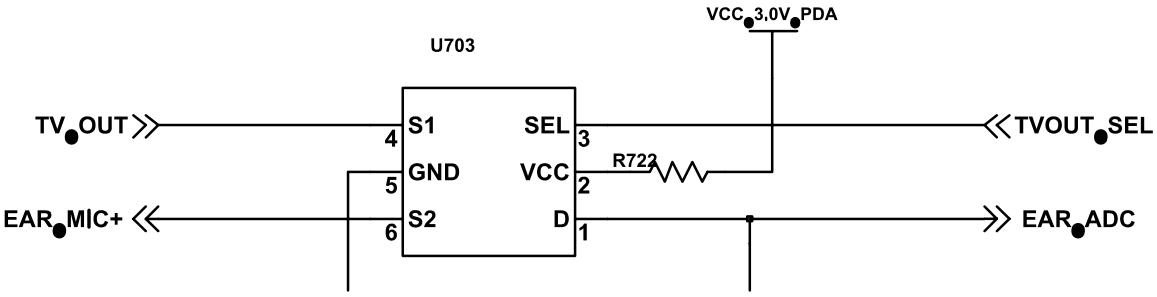

SAMSUNG Proprietary-Contents may change without notice
This Document can not be used without Samsung's authorization

SAMSUNG Proprietary-Contents may change without notice
This Document can not be used without Samsung's authorization

9-5. KEY Working

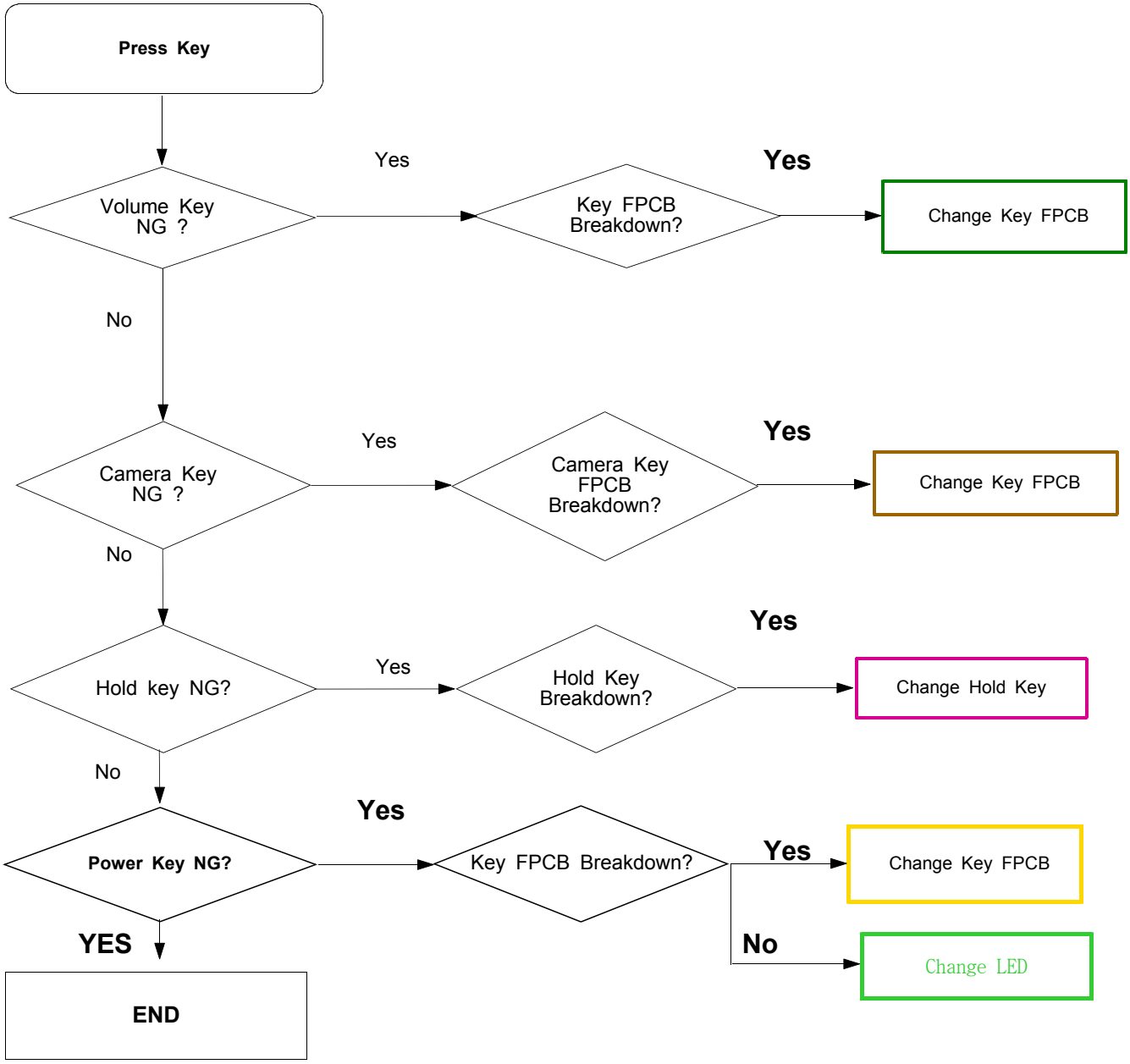

SAMSUNG Proprietary-Contents may change without notice
This Document can not be used without Samsung's authorization

9-6. T-Flash Card Working

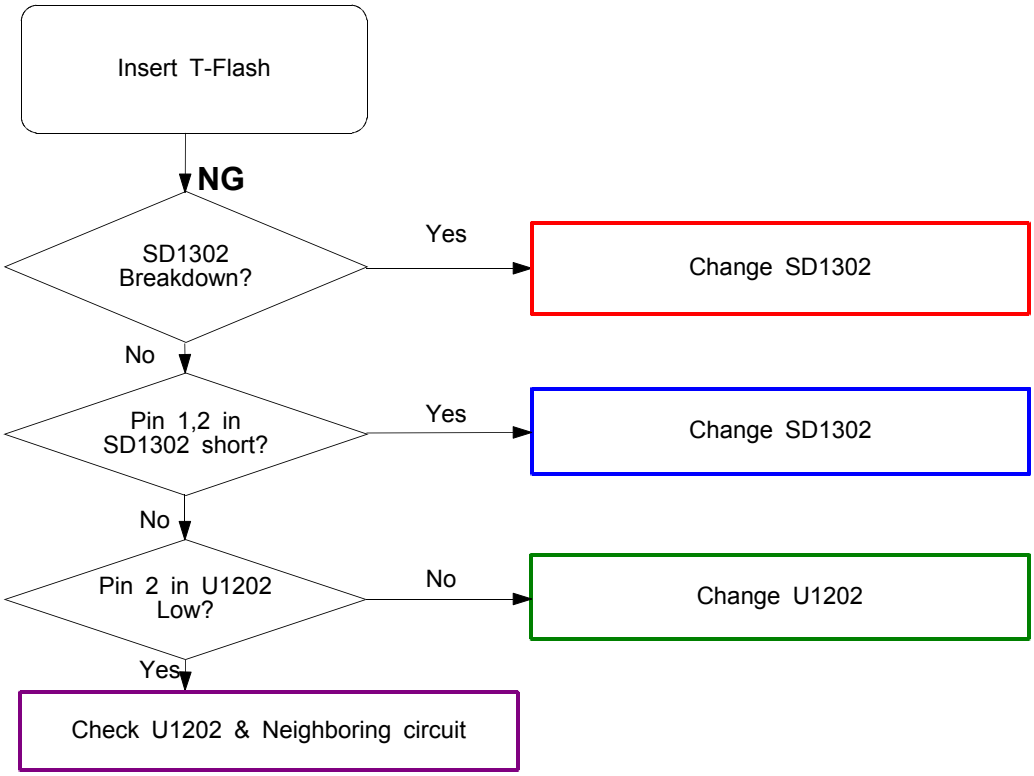

SAMSUNG Proprietary-Contents may change without notice
This Document can not be used without Samsung's authorization

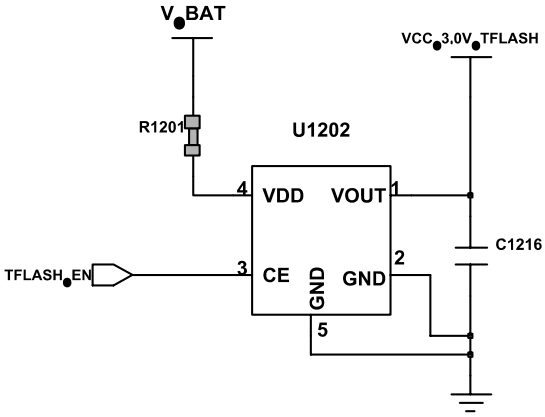

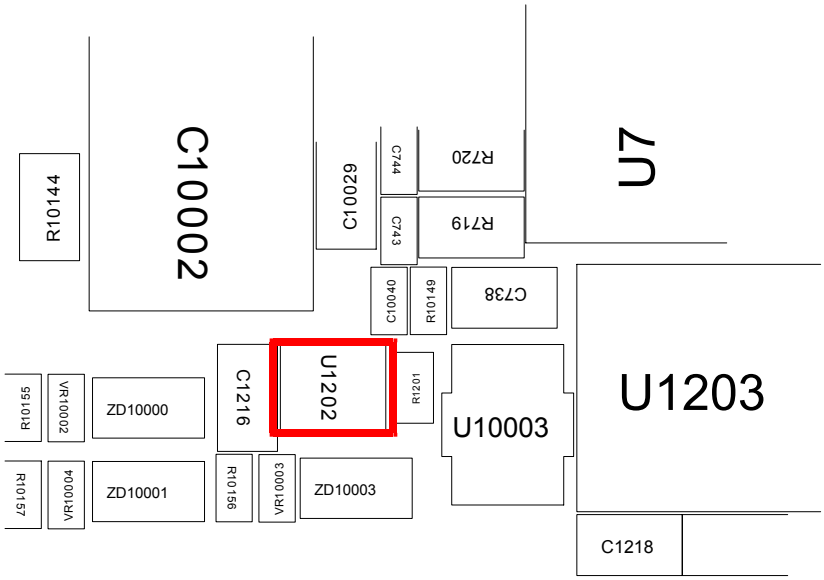

SAMSUNG Proprietary-Contents may change without notice
This Document can not be used without Samsung's authorization

9-7. Bluetooth Working

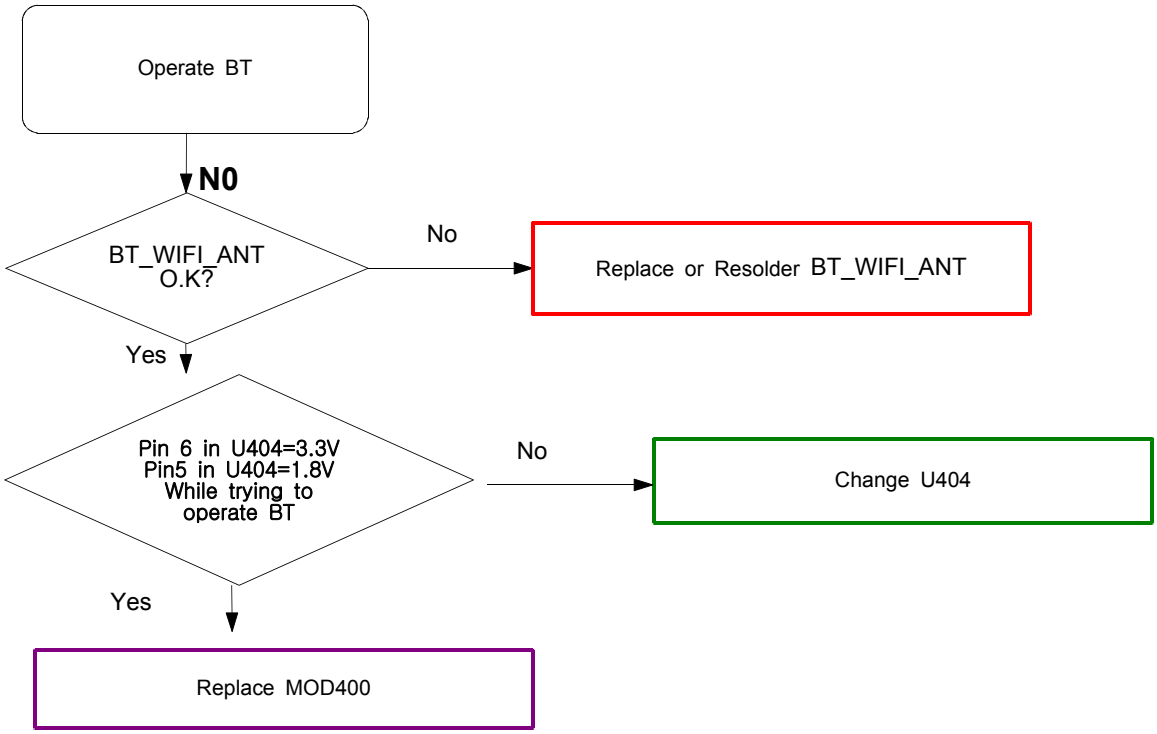

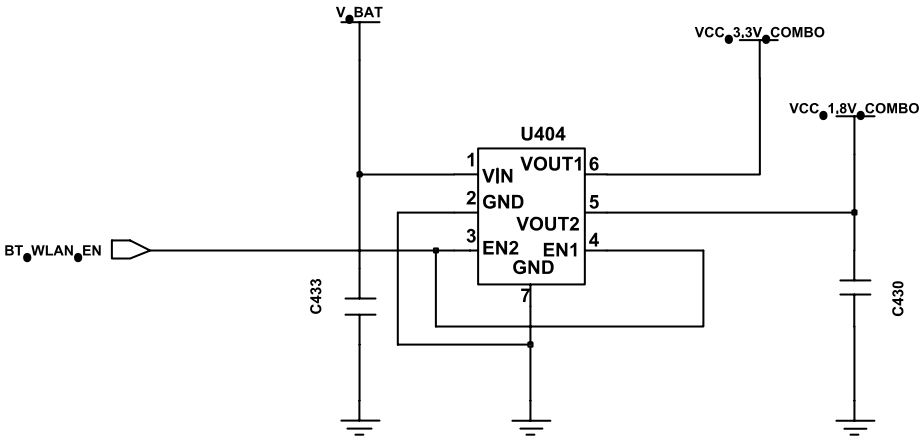

SAMSUNG Proprietary-Contents may change without notice
This Document can not be used without Samsung's authorization

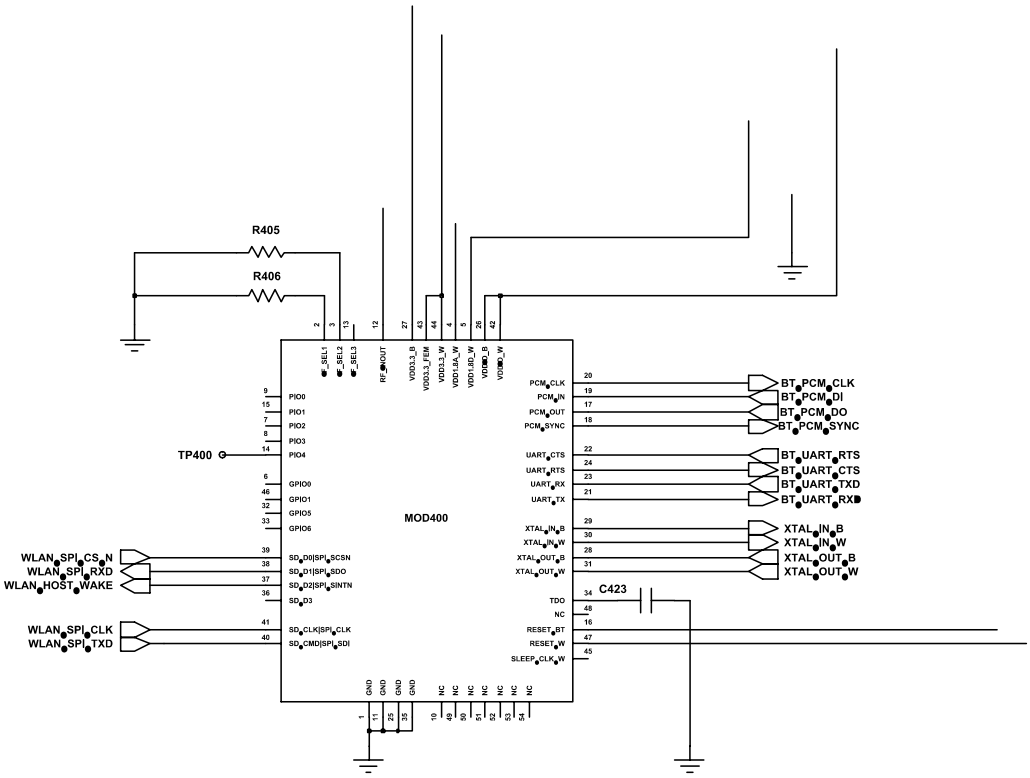

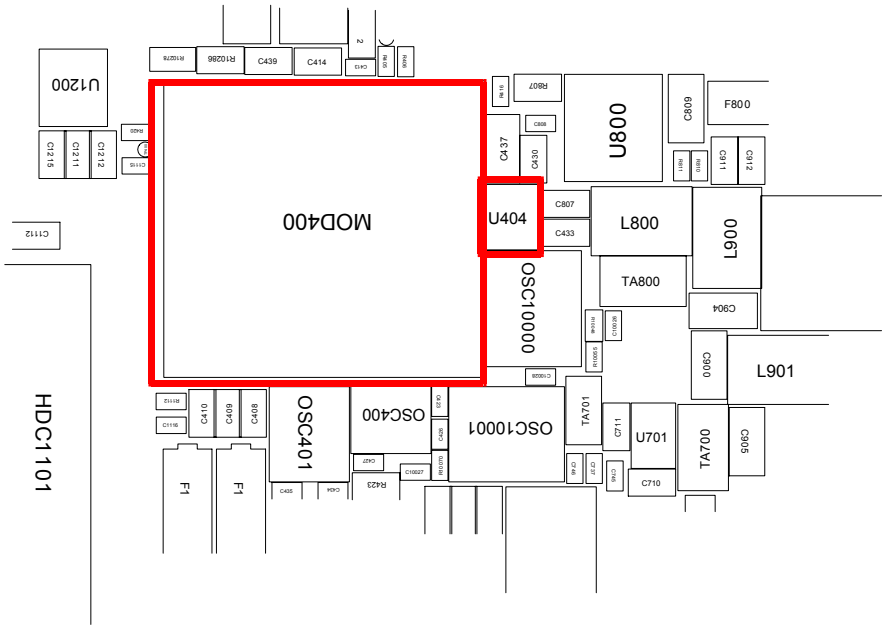

SAMSUNG Proprietary-Contents may change without notice
This Document can not be used without Samsung's authorization

9-8. GSM850 Receiver

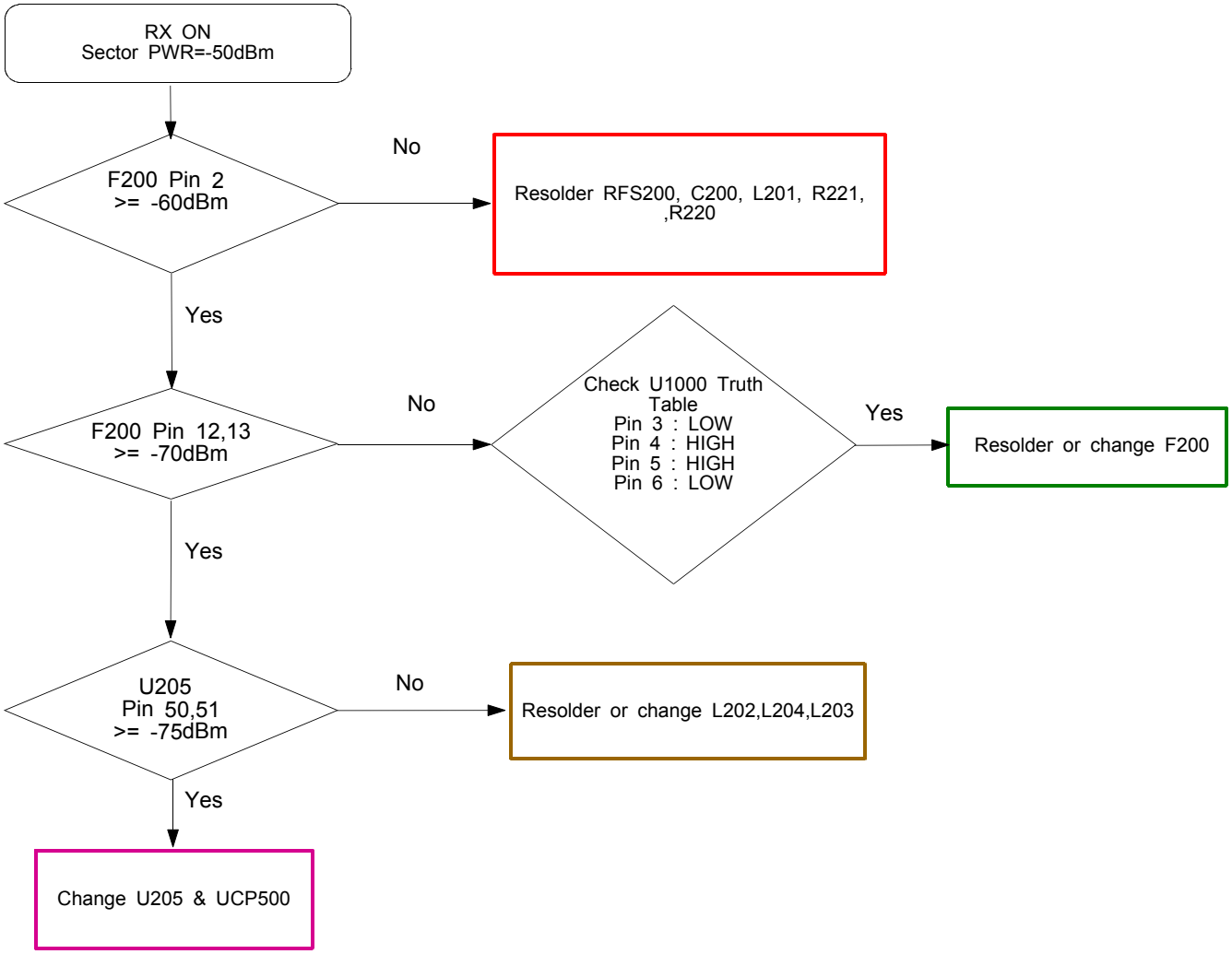

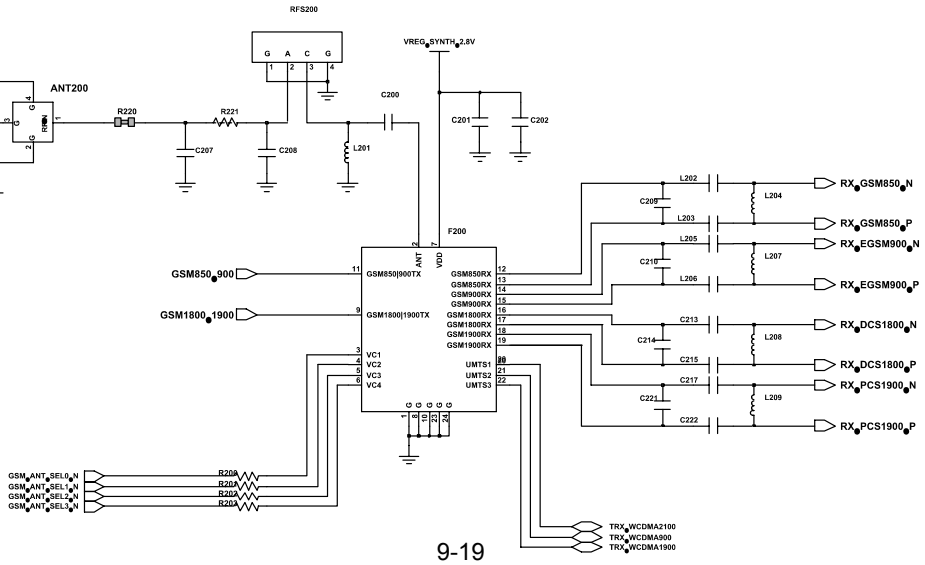

SAMSUNG Proprietary-Contents may change without notice
This Document can not be used without Samsung's authorization

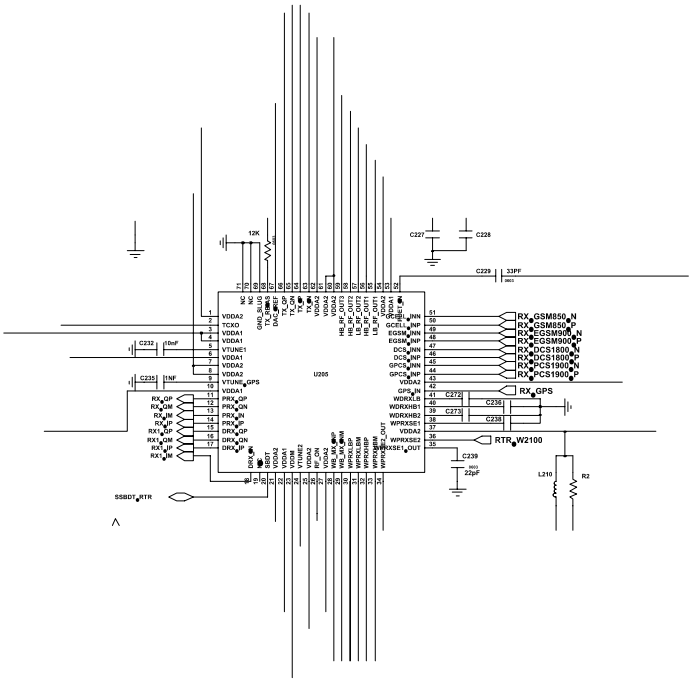

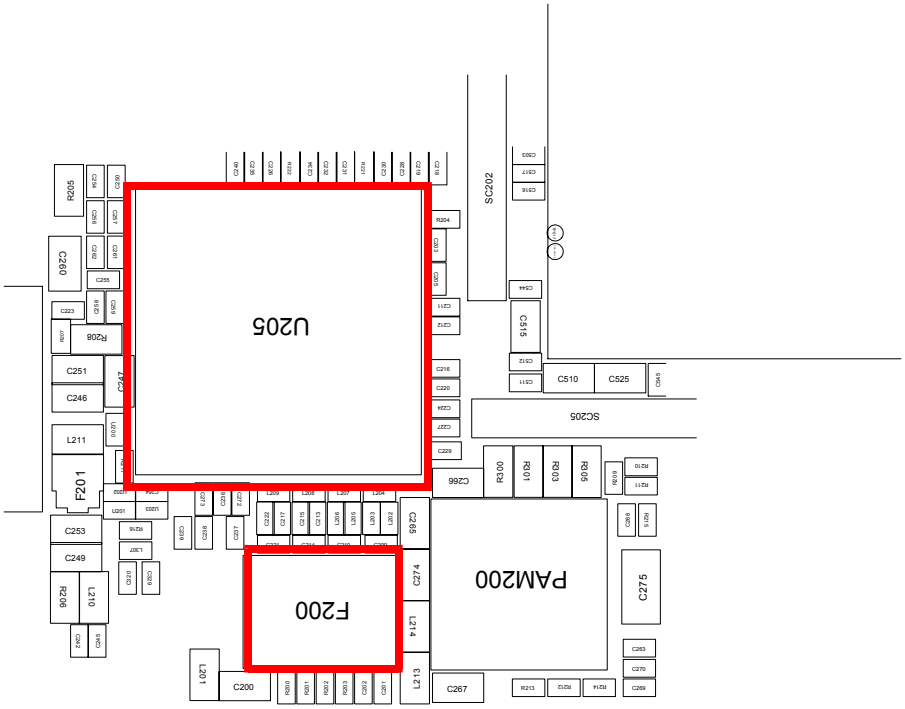

SAMSUNG Proprietary-Contents may change without notice
This Document can not be used without Samsung's authorization

9-9. GSM850 Transmitter

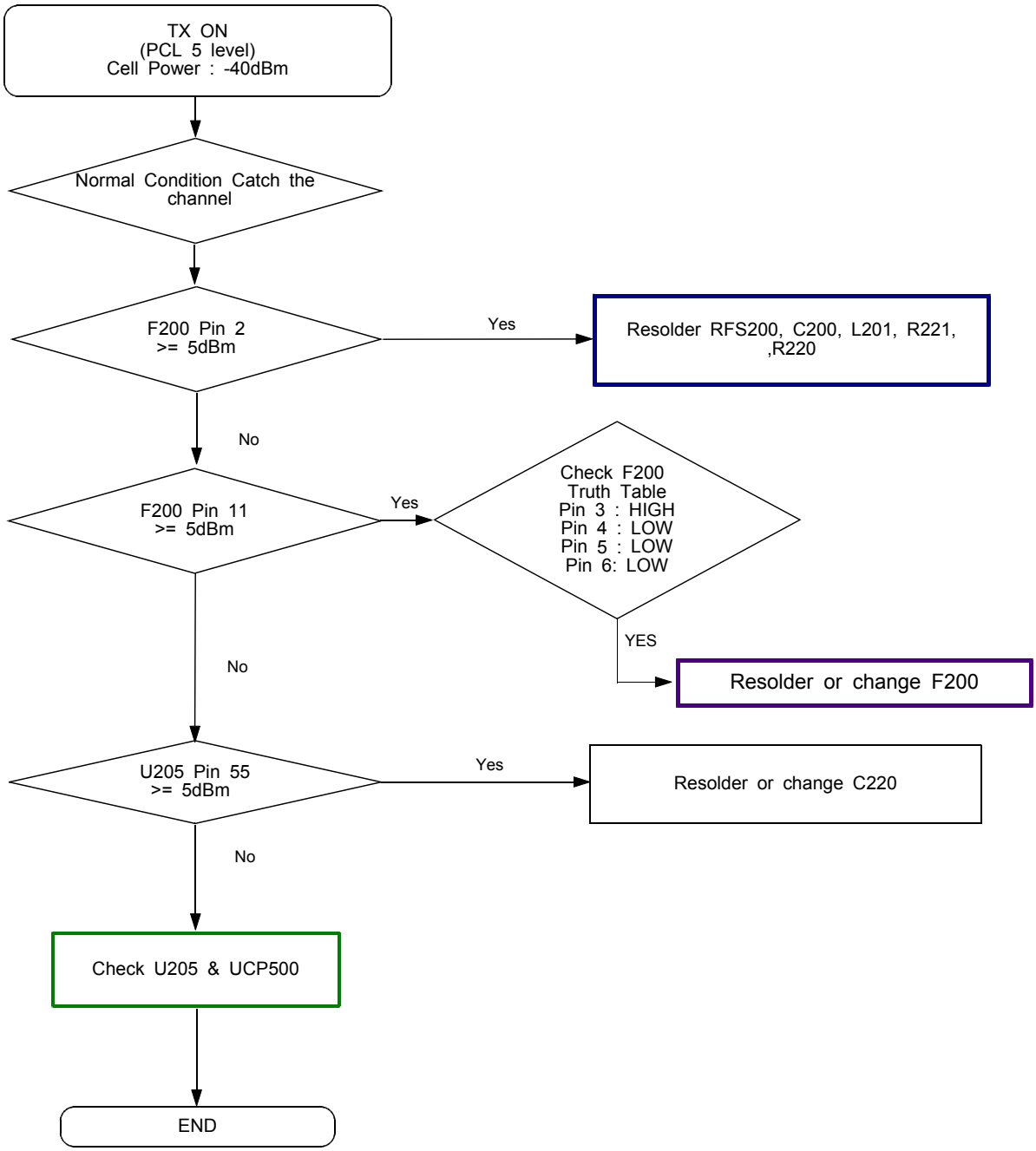

SAMSUNG Proprietary-Contents may change without notice
This Document can not be used without Samsung's authorization

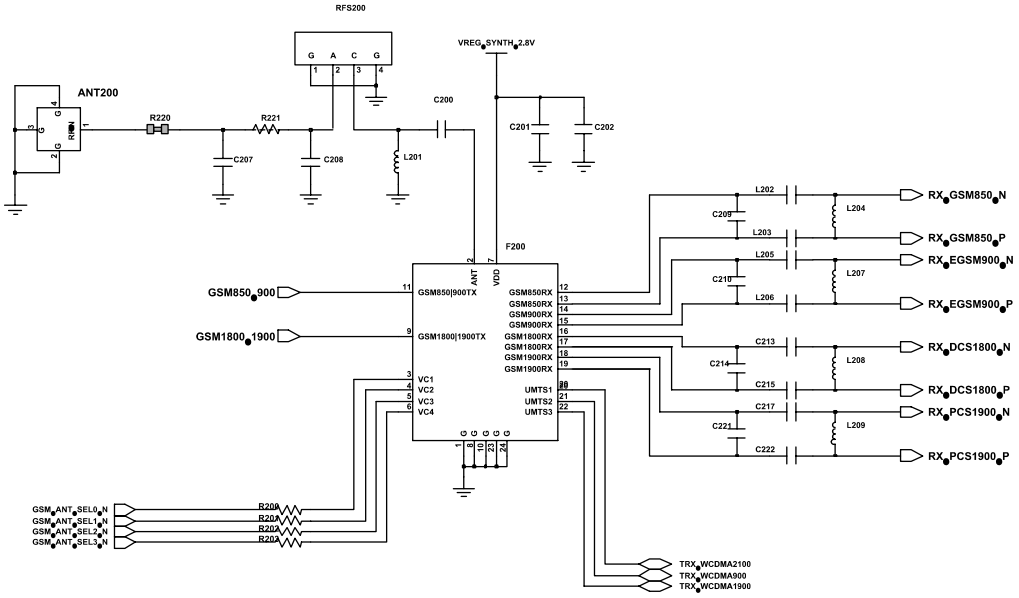

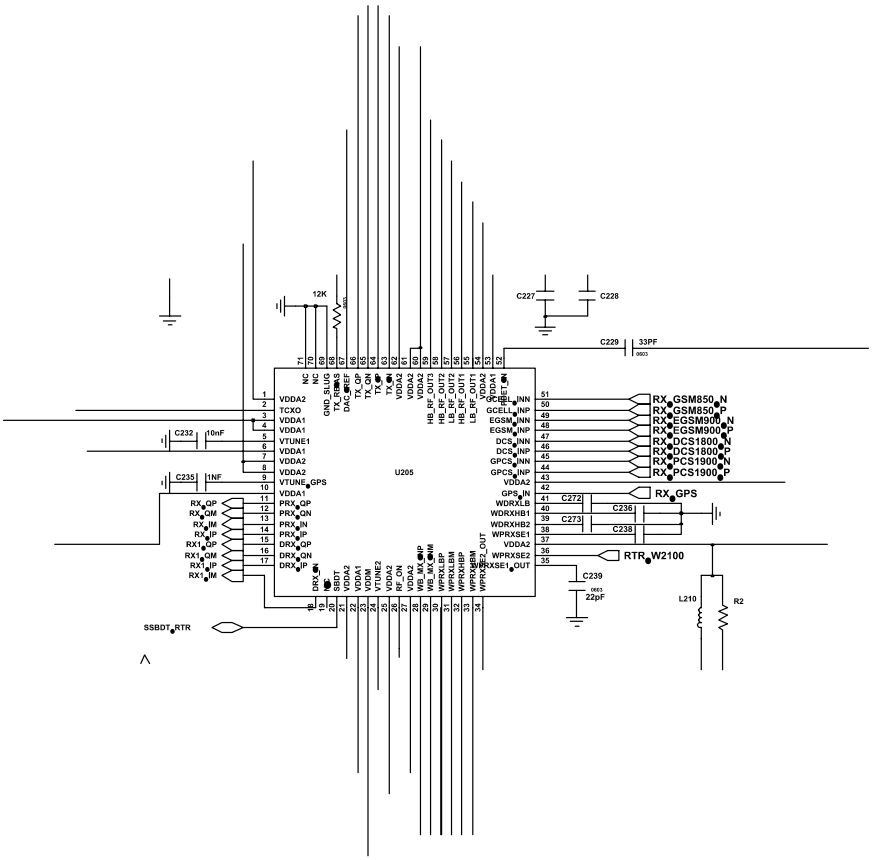

SAMSUNG Proprietary-Contents may change without notice
This Document can not be used without Samsung's authorization

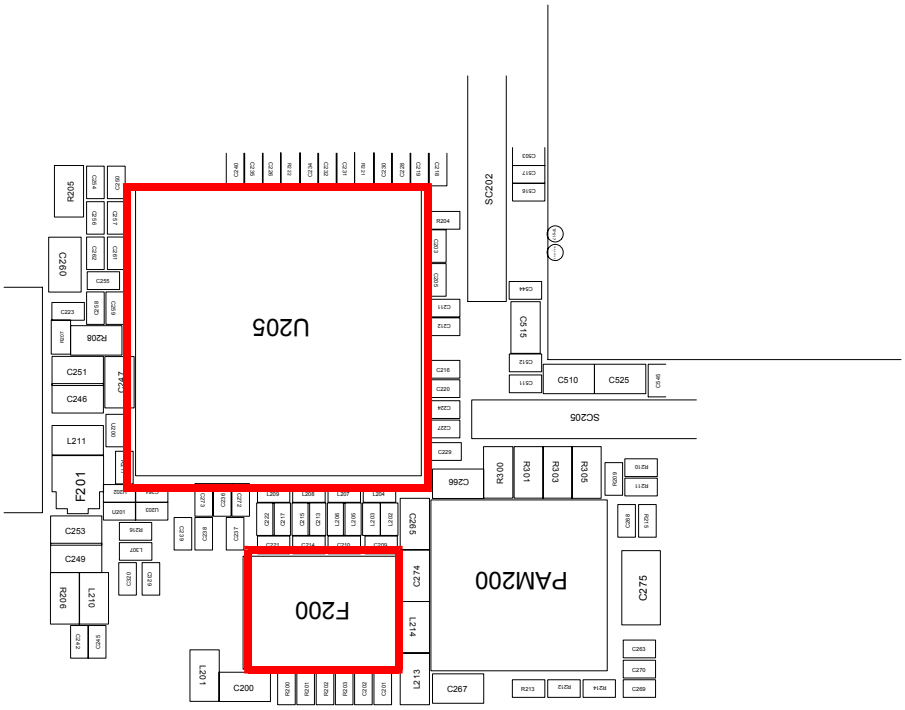

SAMSUNG Proprietary-Contents may change without notice
This Document can not be used without Samsung's authorization

9-10. GSM900 Receiver

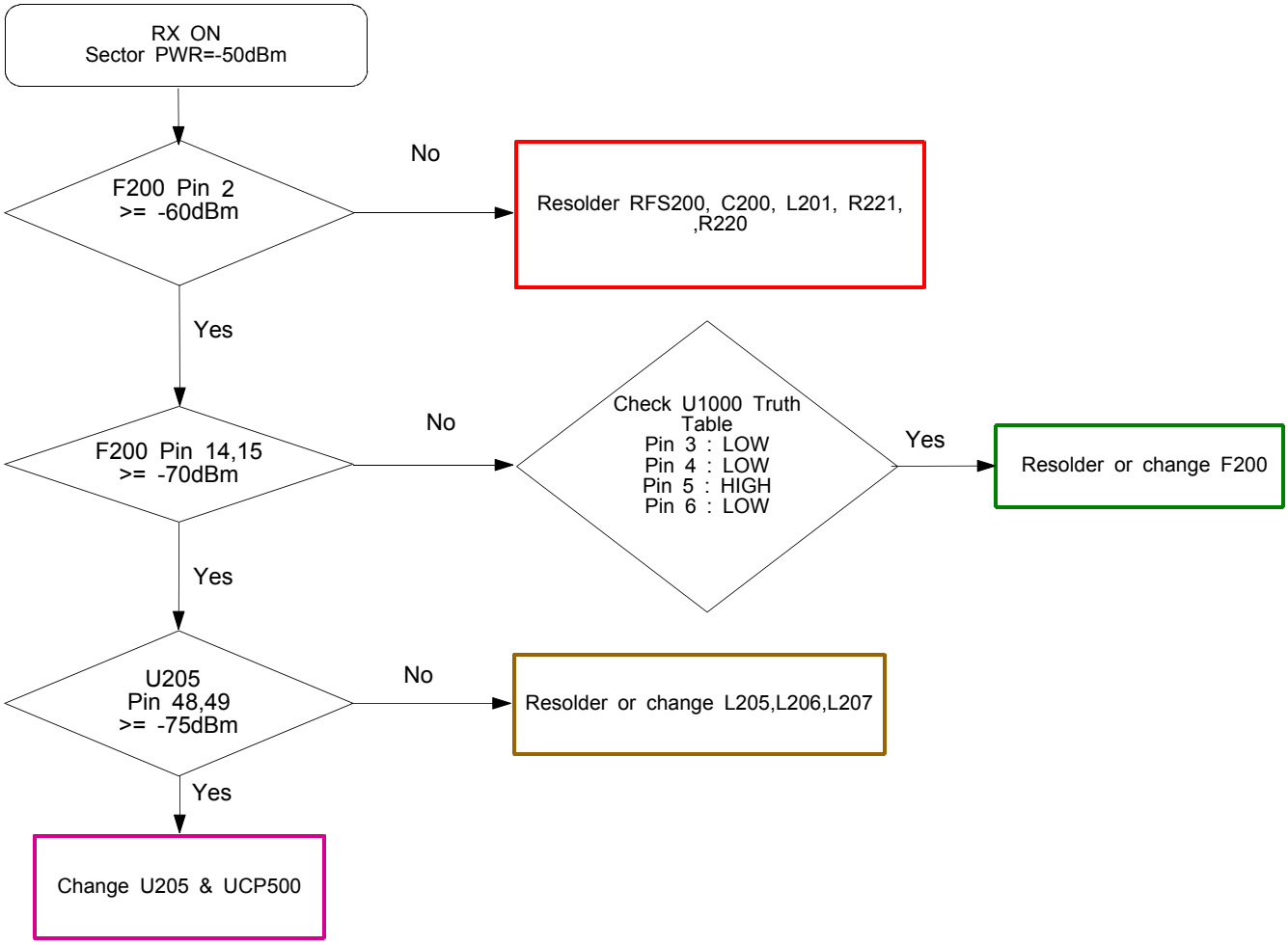

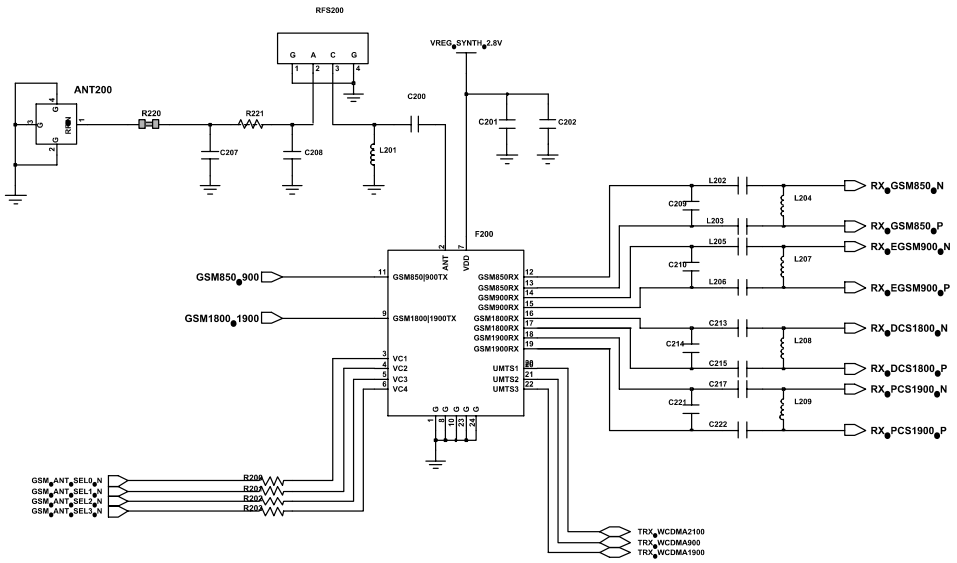

SAMSUNG Proprietary-Contents may change without notice
This Document can not be used without Samsung's authorization

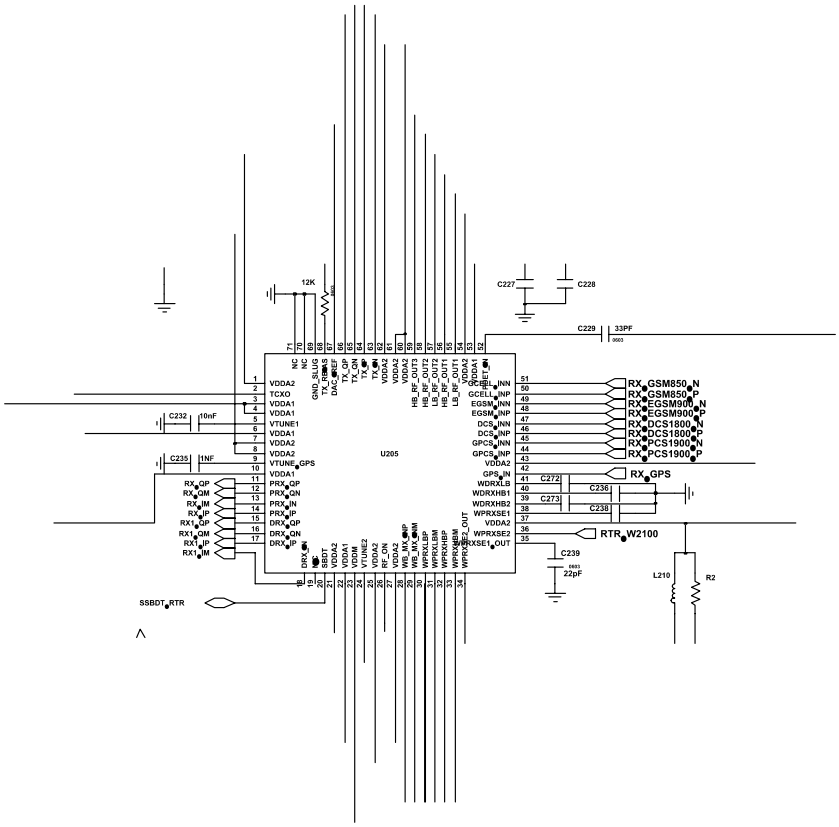

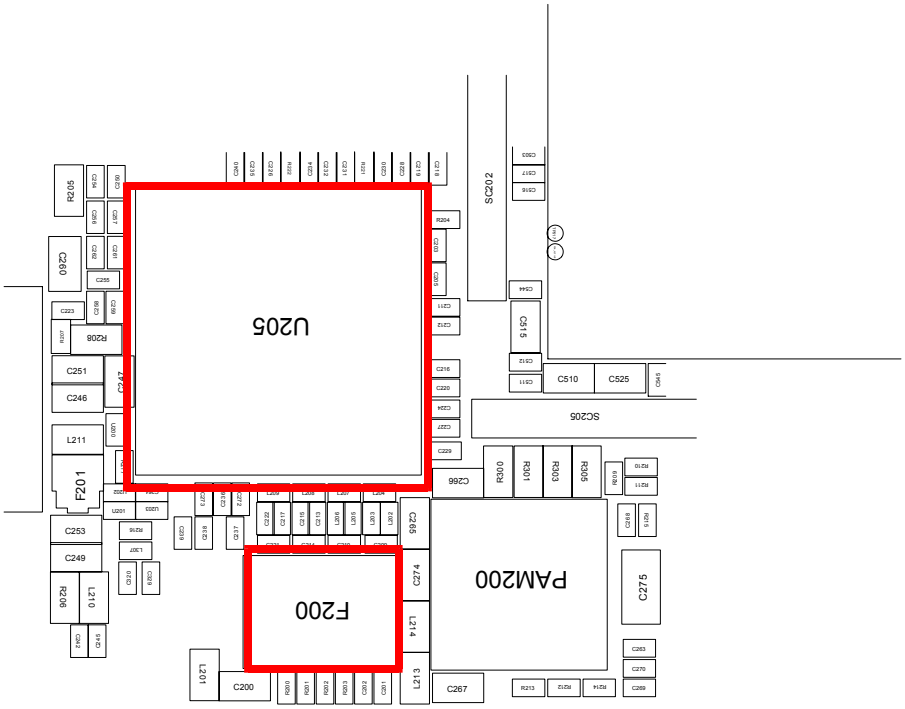

SAMSUNG Proprietary-Contents may change without notice
This Document can not be used without Samsung's authorization

9-11. GSM900 Transmitter

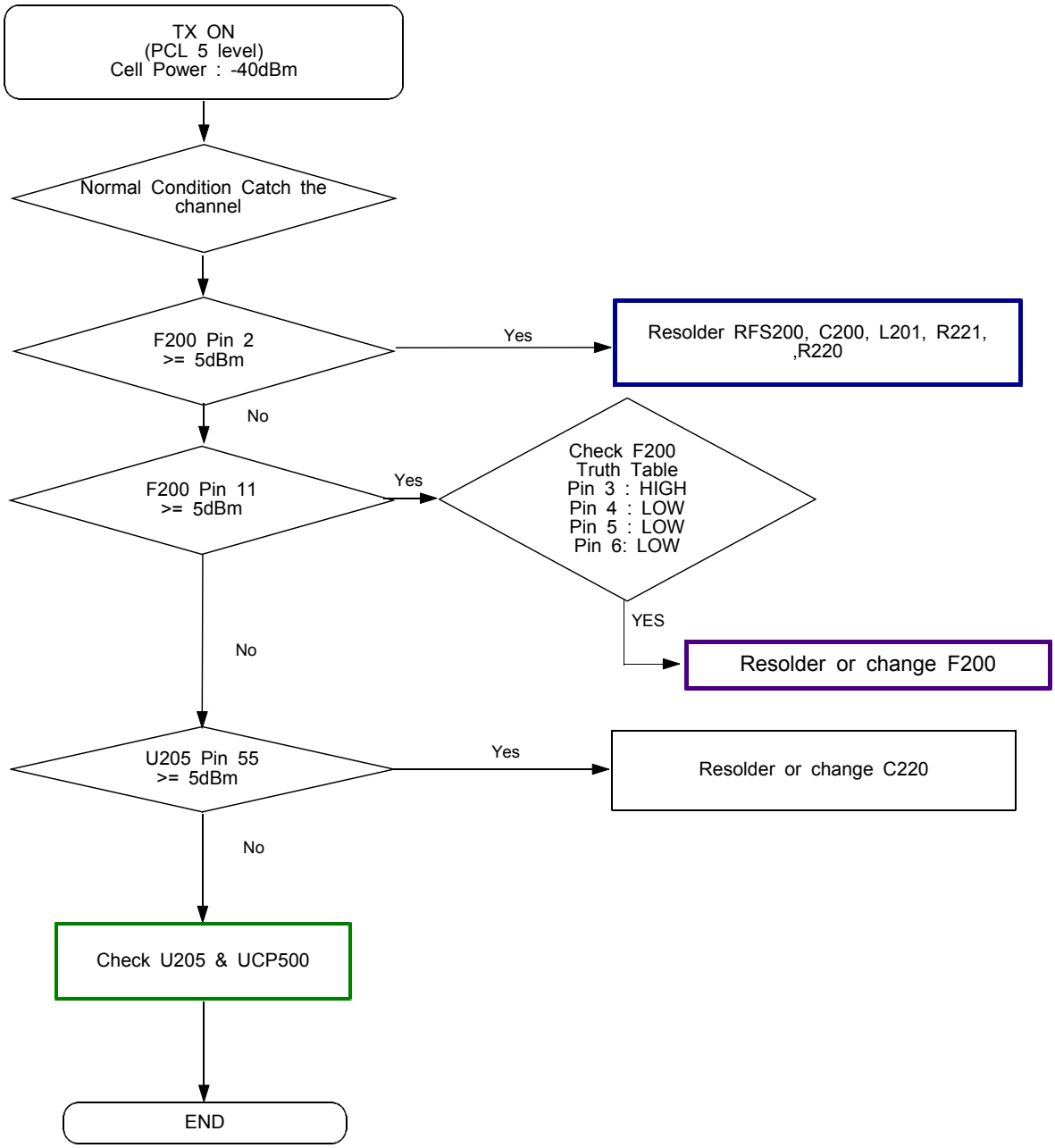

SAMSUNG Proprietary-Contents may change without notice
This Document can not be used without Samsung's authorization

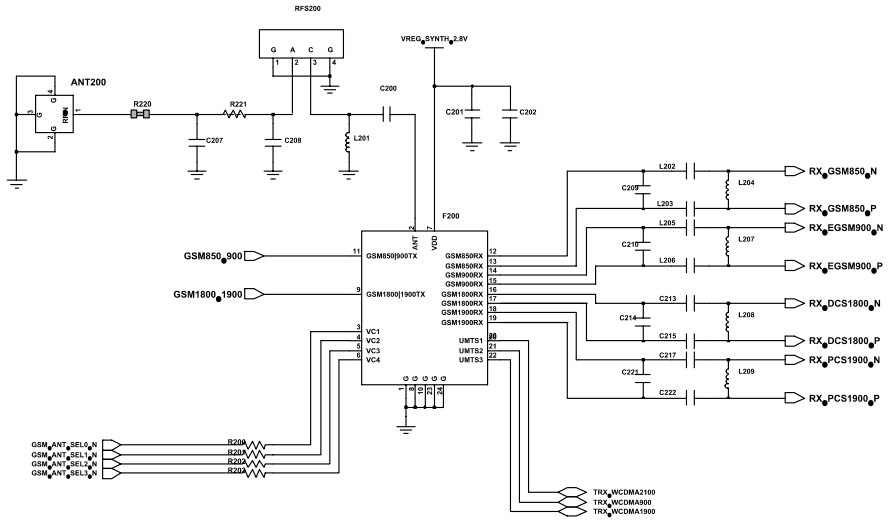

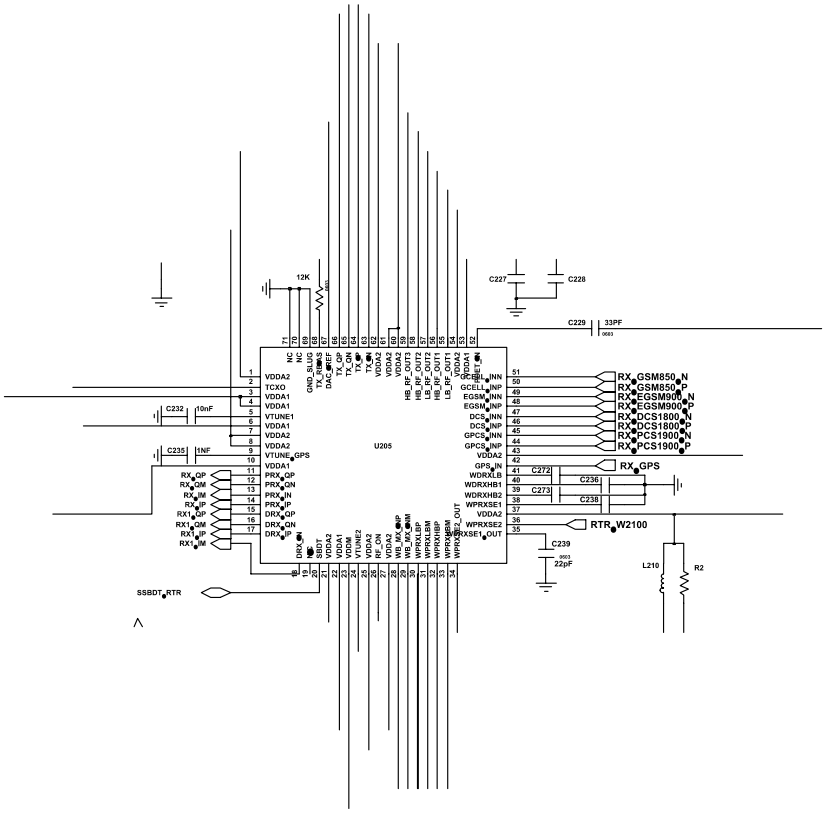

SAMSUNG Proprietary-Contents may change without notice
This Document can not be used without Samsung's authorization

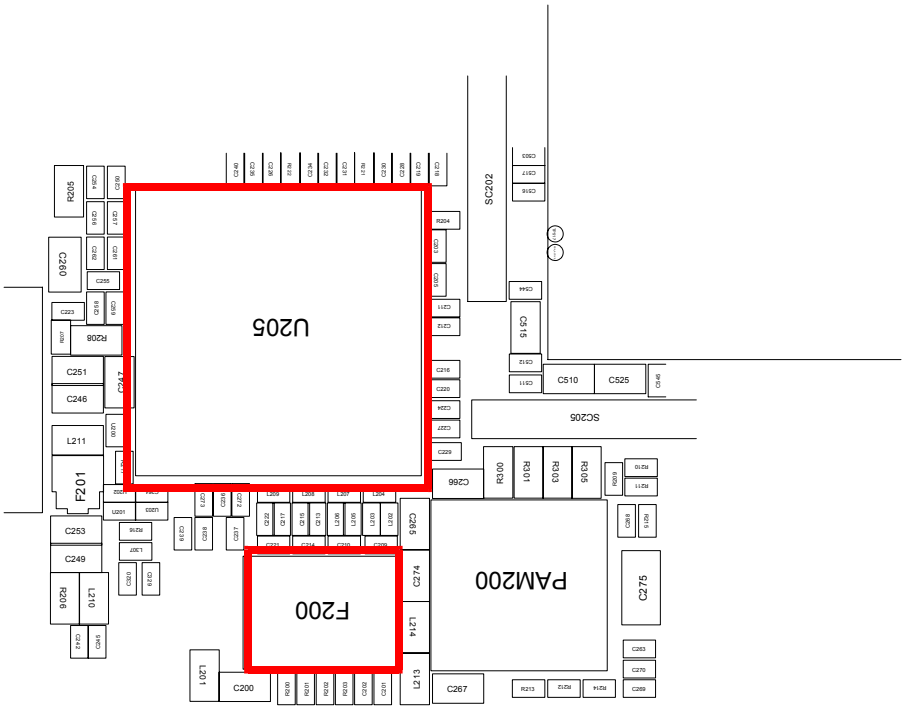
C275
PAM200
C274
L214
L213
C267
F200
L201
C200
C285
C266
R300
R301
R303
R305
SC206
C510
C525
C515
SC202
U205
C260
R205
R206
L210
F201
C253
C249
C251
C246
L211
R208
C223
C216
C220
C229
R204
C544
C269
C270
C263
R213
R214
R212
R210
R211
R215
R209
C245
C246
C247
C248
C249
C250
C251
C252
C253
C254
C255
C256
C257
C258
C259
C260
C261
C262
C263
C264
C265
C266
C267
C268
C269
C270
C271
C272
C273
C274
C275
C276
C277
C278
C279
C280
C281
C282
C283
C284
C285
C286
C287
C288
C289
C290
C291
C292
C293
C294
C295
C296
C297
C298
C299
C300
C301
C302
C303
C304
C305
C306
C307
C308
C309
C310
C311
C312
C313
C314
C315
C316
C317
C318
C319
C320
C321
C322
C323
C324
C325
C326
C327
C328
C329
C330
C331
C332
C333
C334
C335
C336
C337
C338
C339
C340
C341
C342
C343
C344
C345
C346
R201
R202
R203
R204
R205
R206
R207
R208
R209
R210
R211
R212
R213
R214
R215
R216
R217
R218
R219
R220
R221
R222
R223
R224
R225
R226
R227
R228
R229
R230
R231
R232
R233
R234
R235
R236
R237
R238
R239
R240

9-12. DCS Receiver

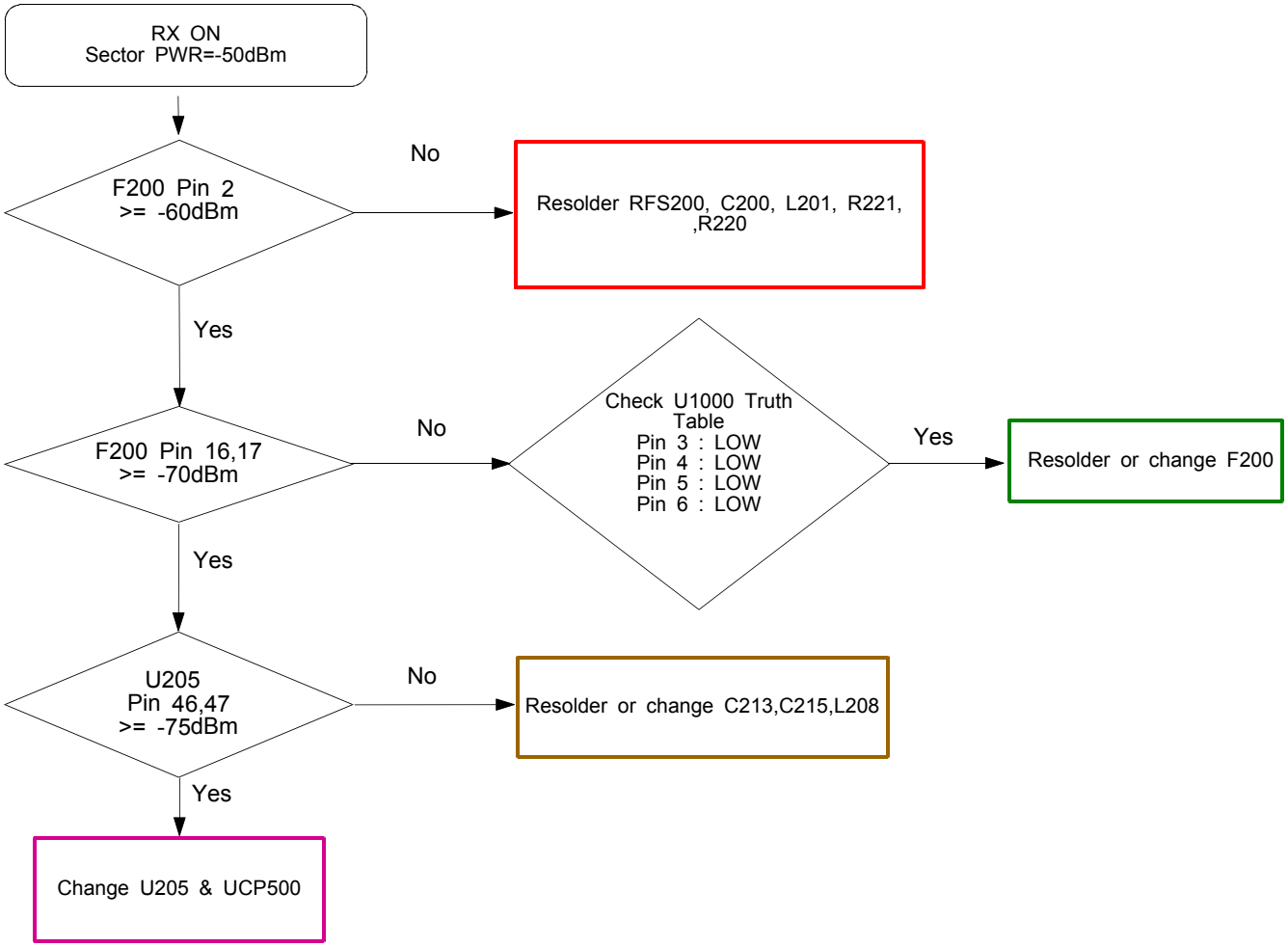

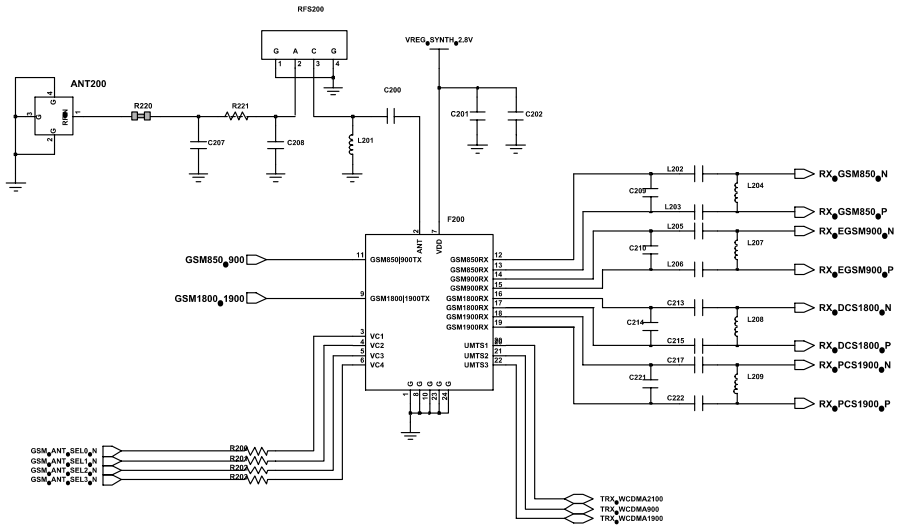

SAMSUNG Proprietary-Contents may change without notice
This Document can not be used without Samsung's authorization

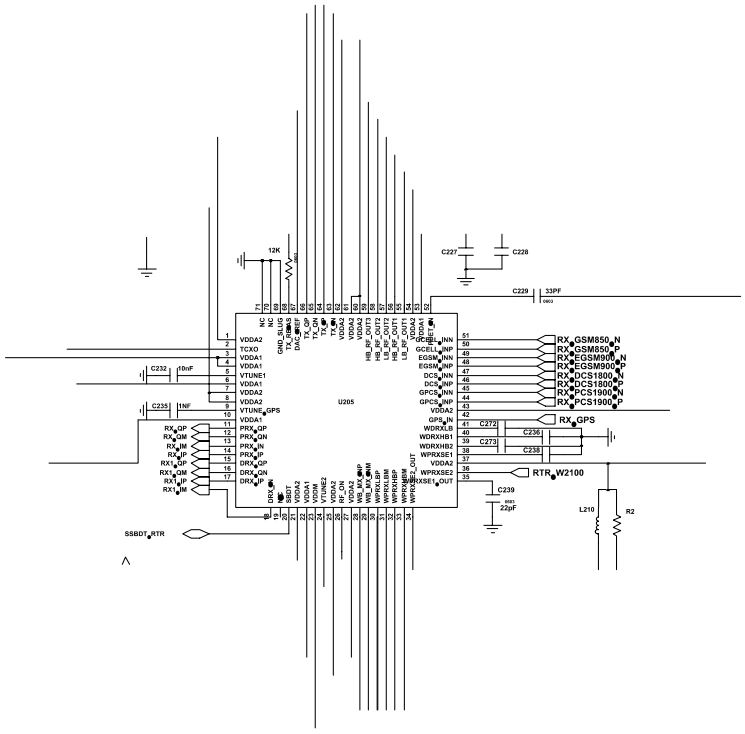

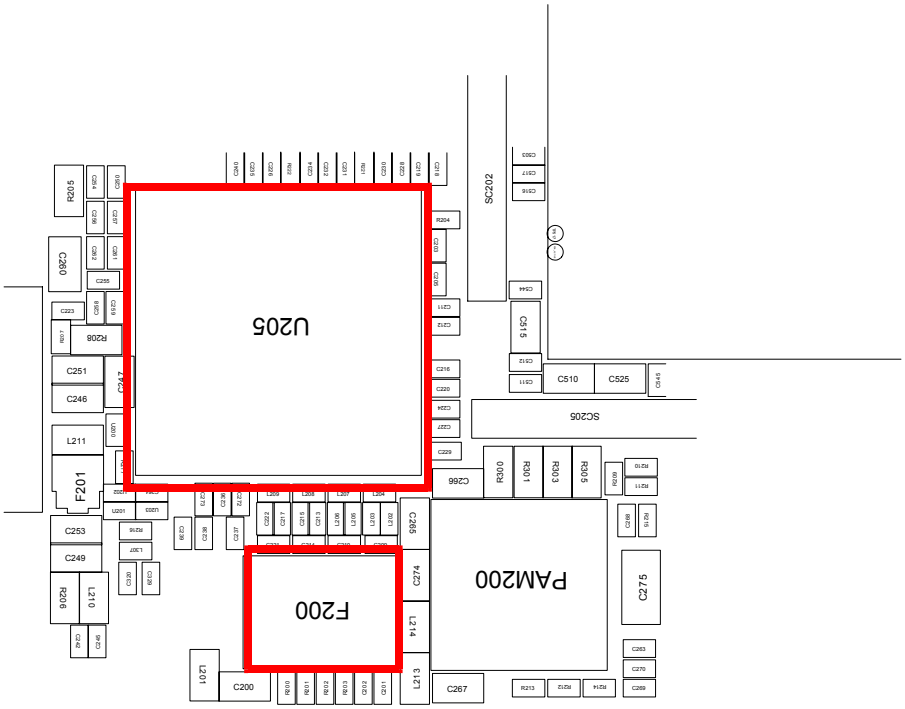

SAMSUNG Proprietary-Contents may change without notice
This Document can not be used without Samsung's authorization

9-13. DCS Transmitter

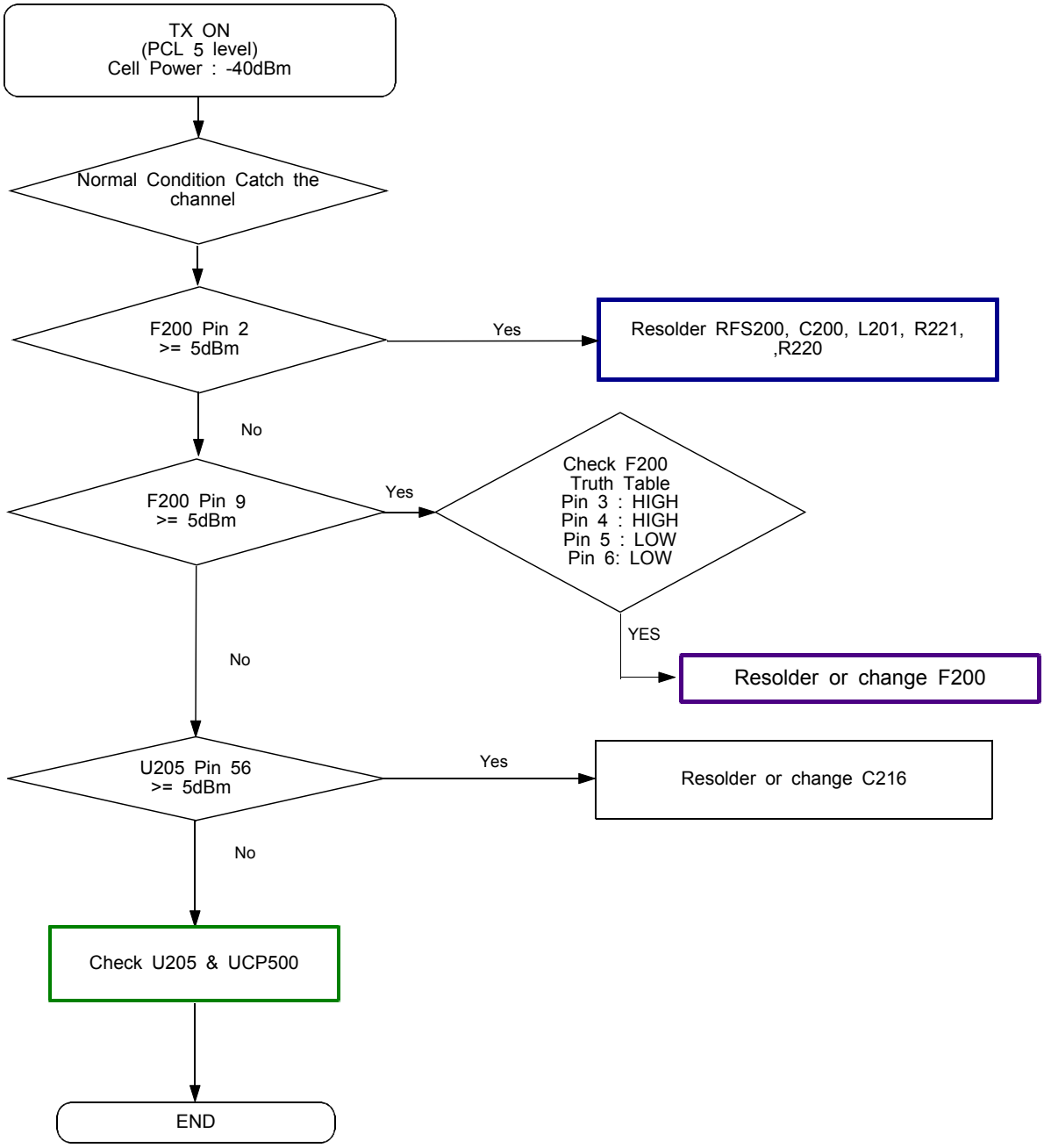

SAMSUNG Proprietary-Contents may change without notice
This Document can not be used without Samsung's authorization

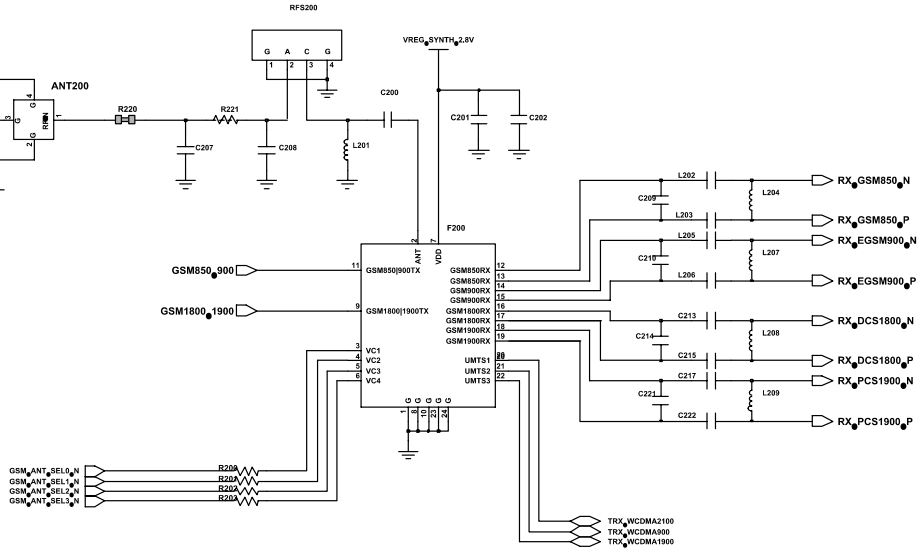

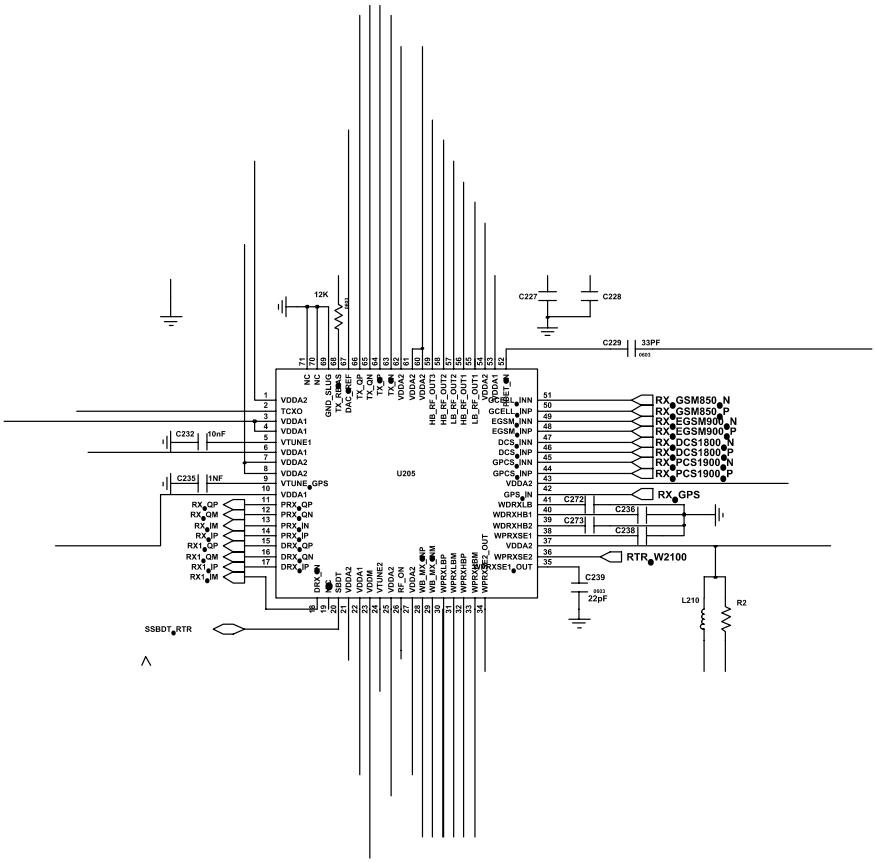

SAMSUNG Proprietary-Contents may change without notice
This Document can not be used without Samsung's authorization

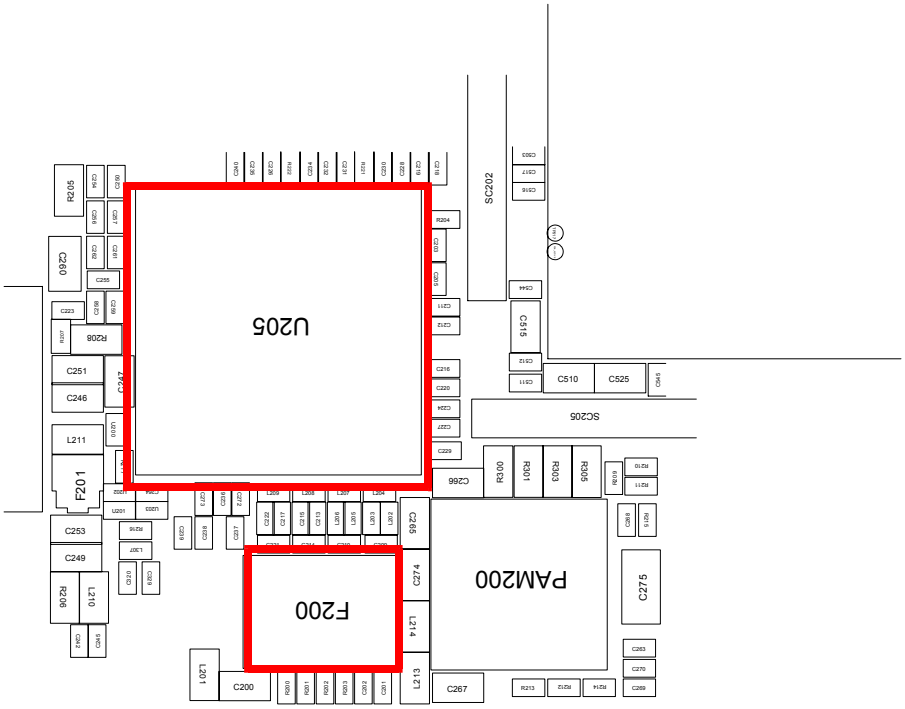

SAMSUNG Proprietary-Contents may change without notice
This Document can not be used without Samsung's authorization

9-14. PCS Receiver

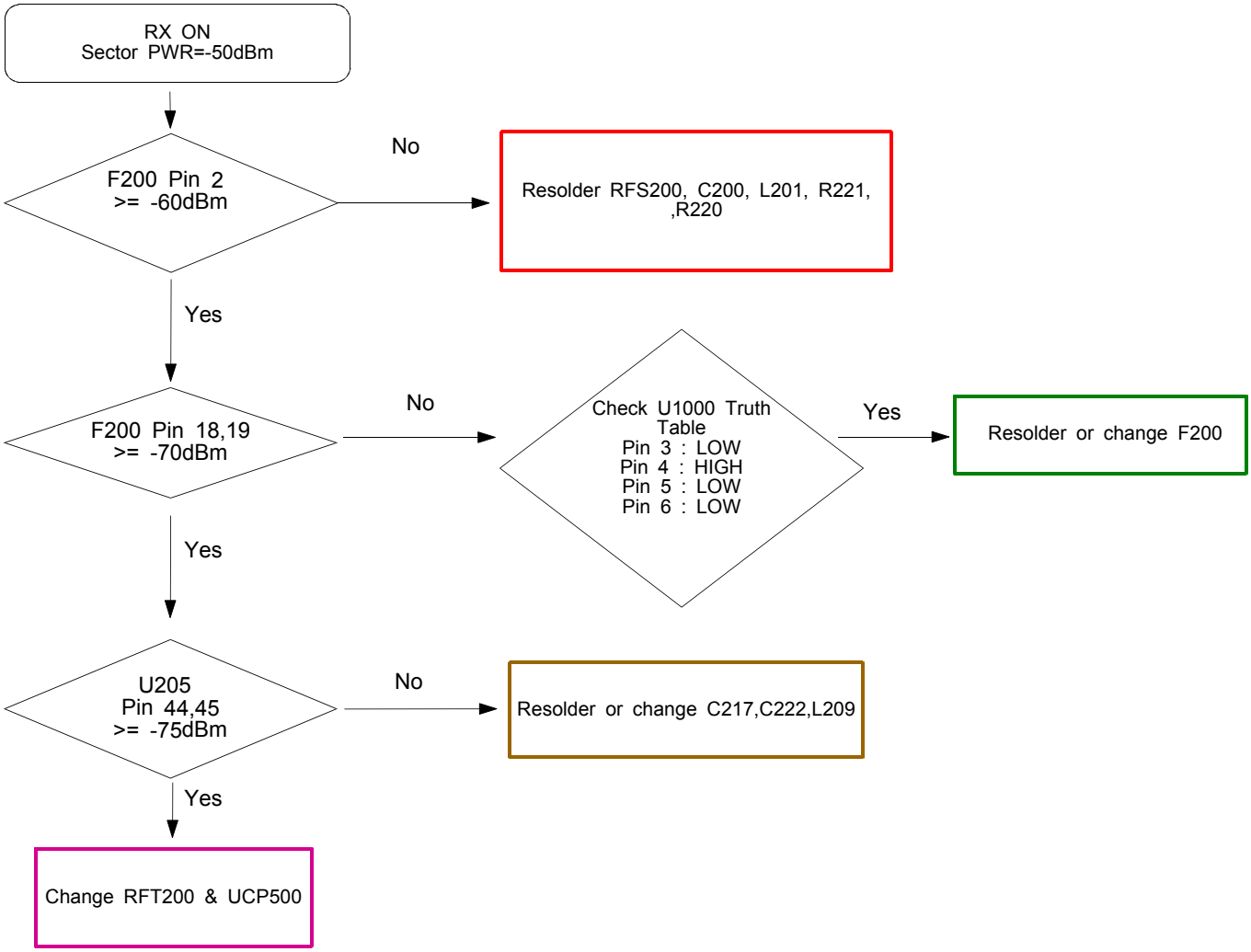

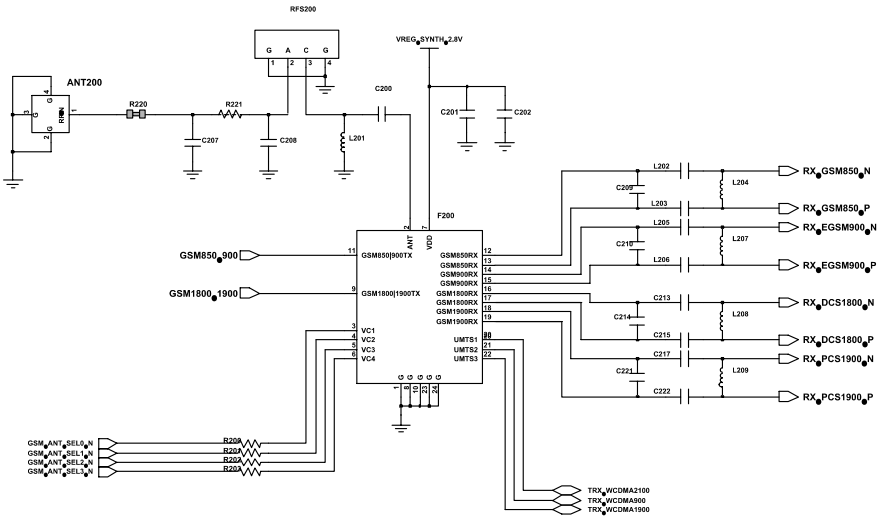

SAMSUNG Proprietary-Contents may change without notice
This Document can not be used without Samsung's authorization

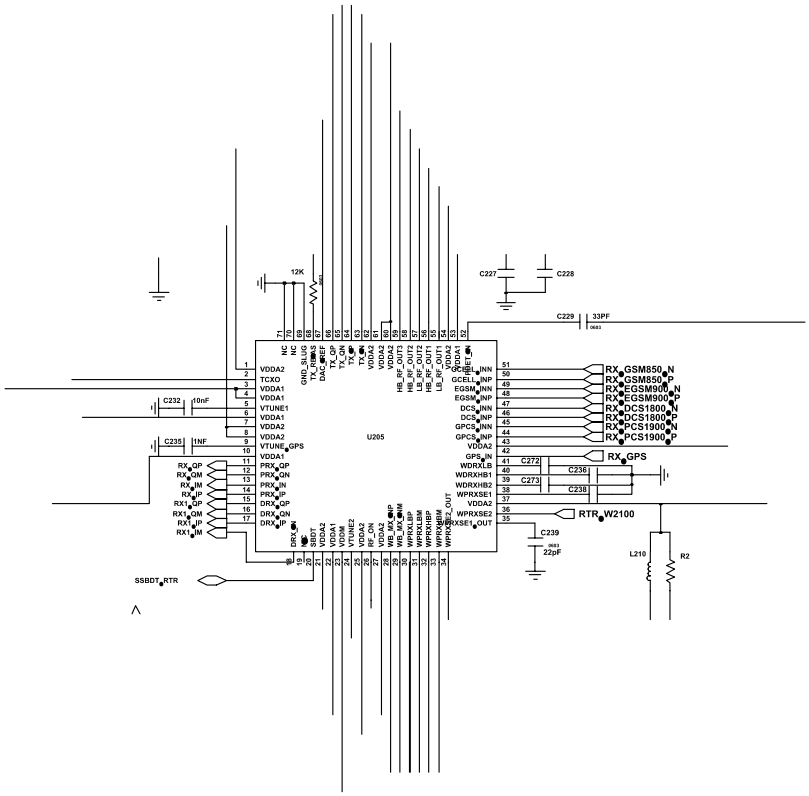

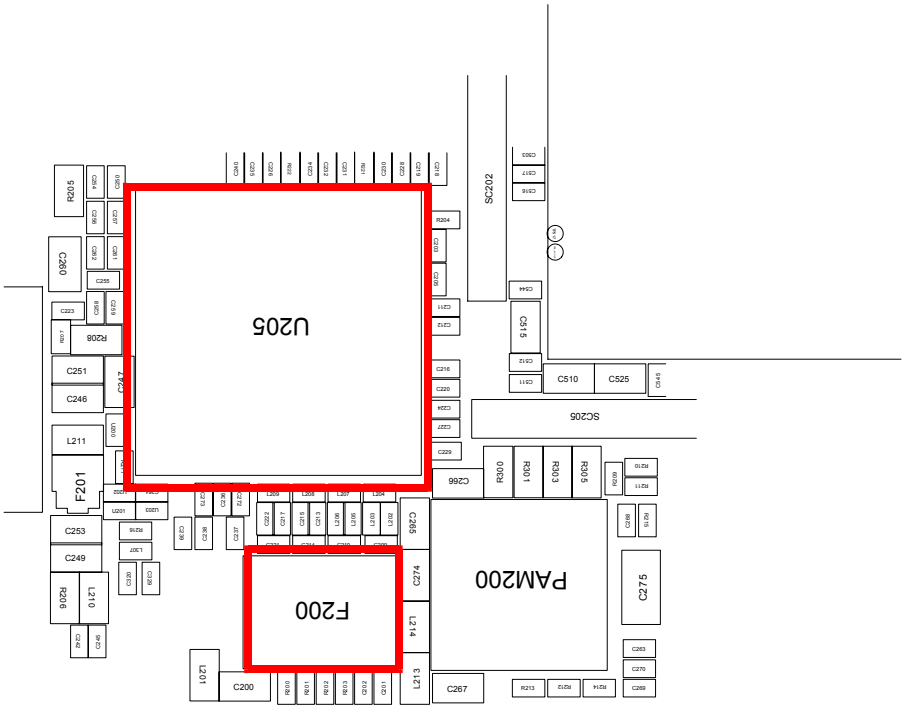

SAMSUNG Proprietary-Contents may change without notice
This Document can not be used without Samsung's authorization

9-15. PCS Transmitter

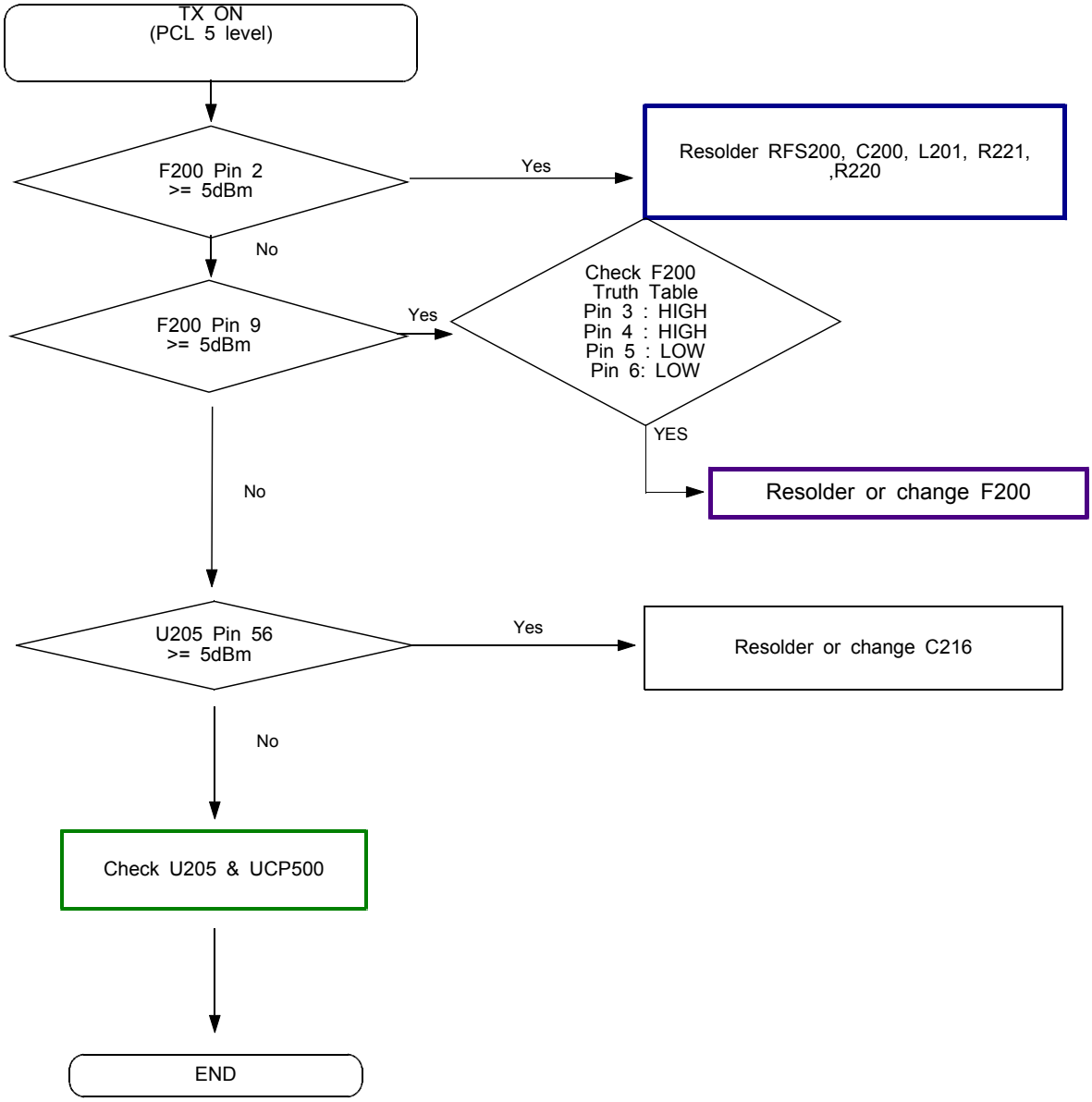

SAMSUNG Proprietary-Contents may change without notice
This Document can not be used without Samsung's authorization

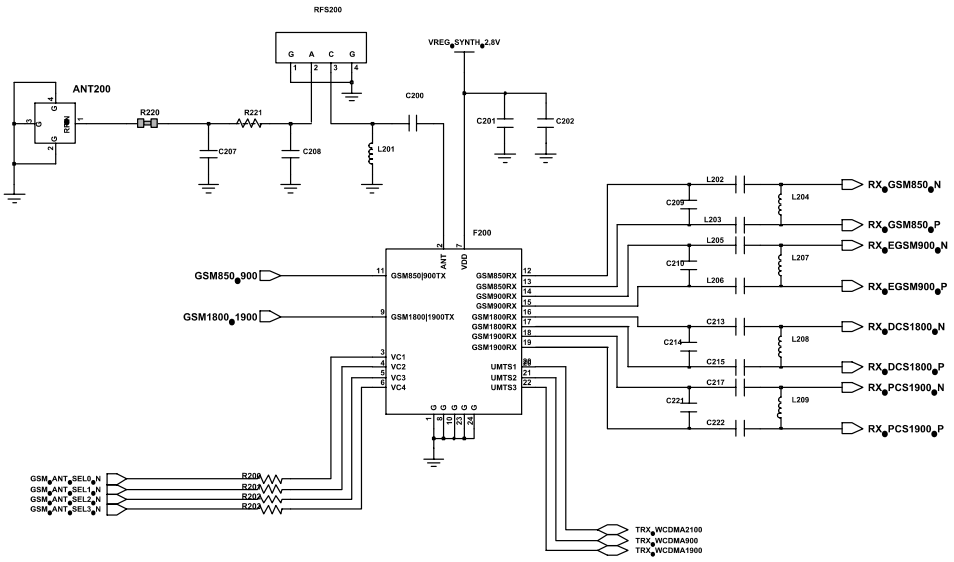

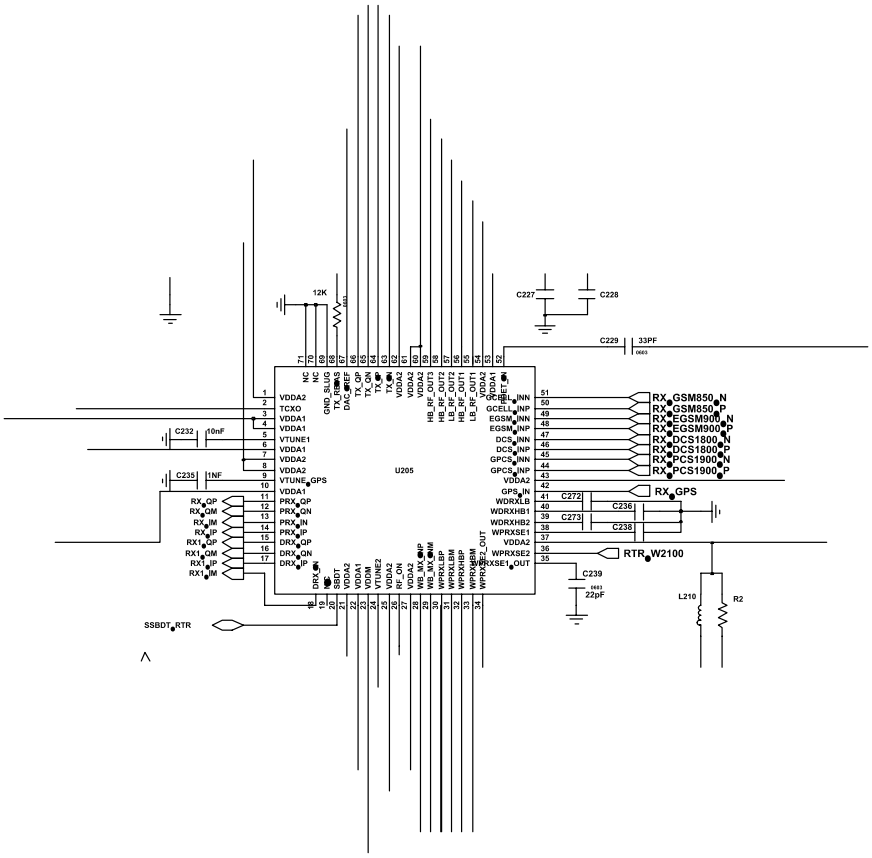

SAMSUNG Proprietary-Contents may change without notice
This Document can not be used without Samsung's authorization

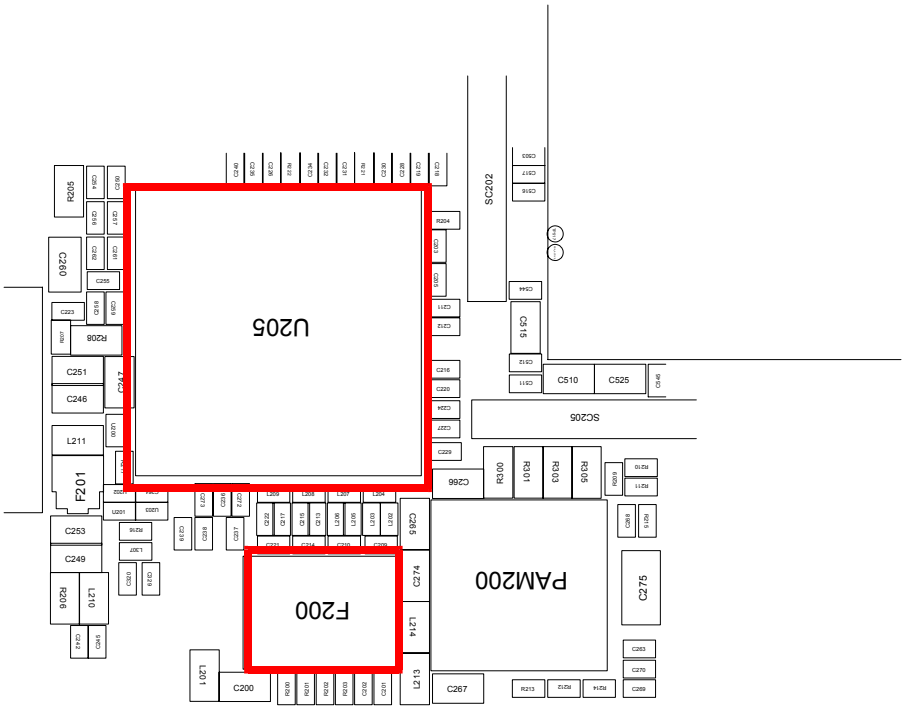

SAMSUNG Proprietary-Contents may change without notice
This Document can not be used without Samsung's authorization

9-16. WCDMA 2100 Receiver

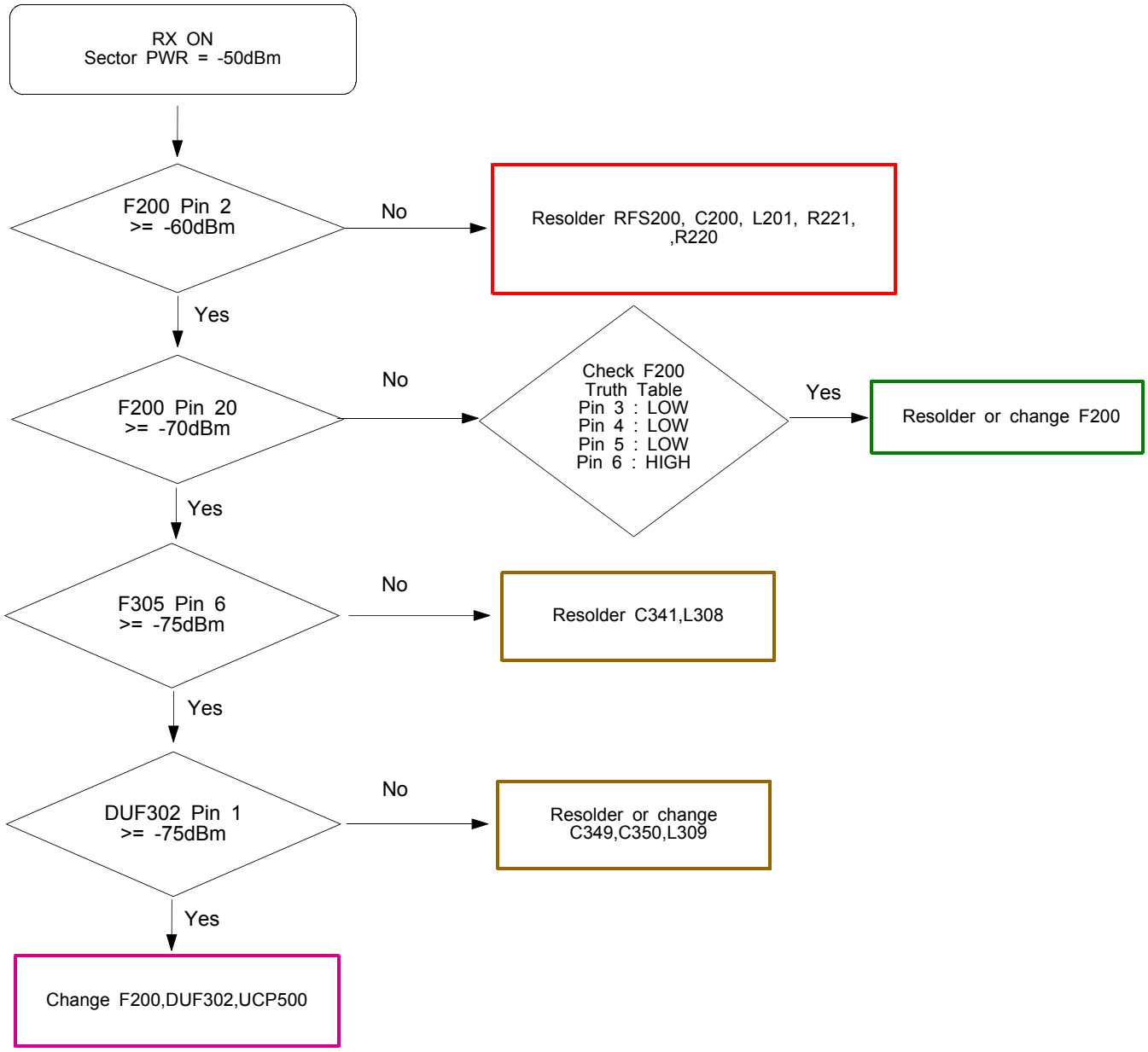

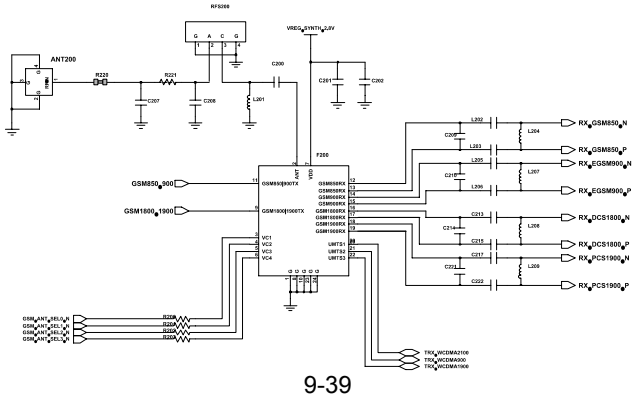

SAMSUNG Proprietary-Contents may change without notice
This Document can not be used without Samsung's authorization

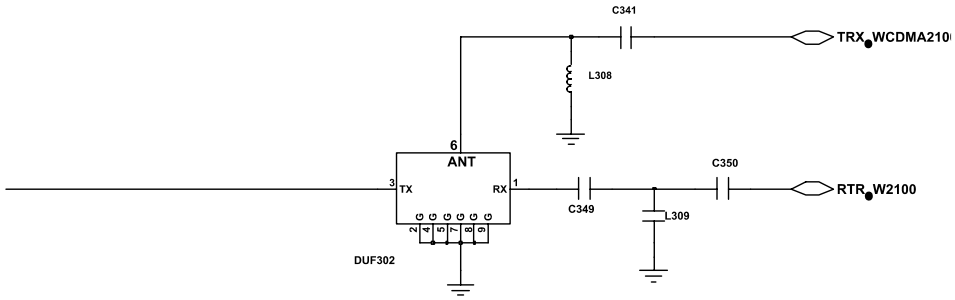

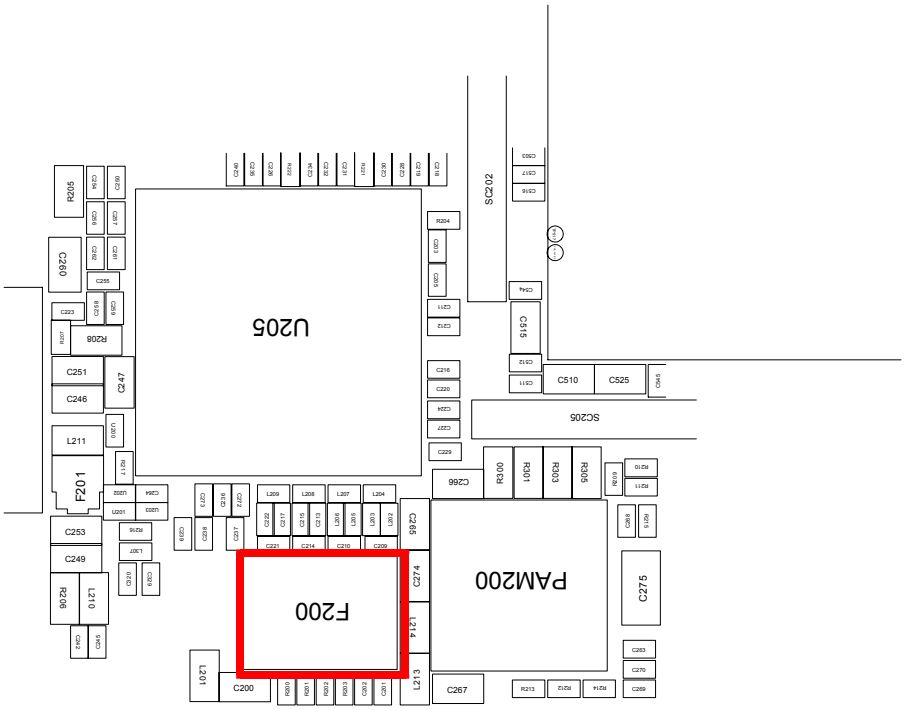

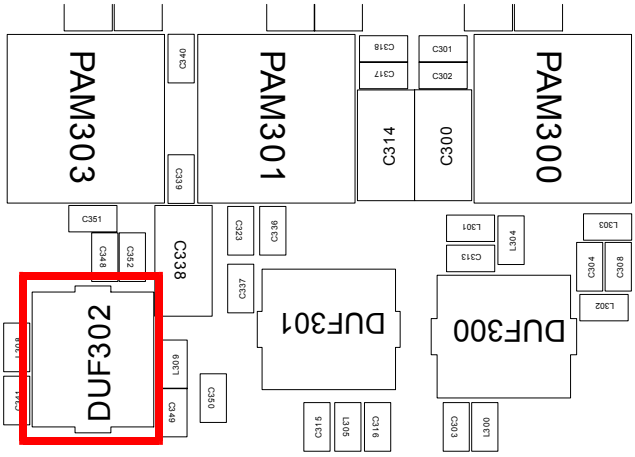

SAMSUNG Proprietary-Contents may change without notice
This Document can not be used without Samsung's authorization

9-17. WCDMA 2100 Transmitter

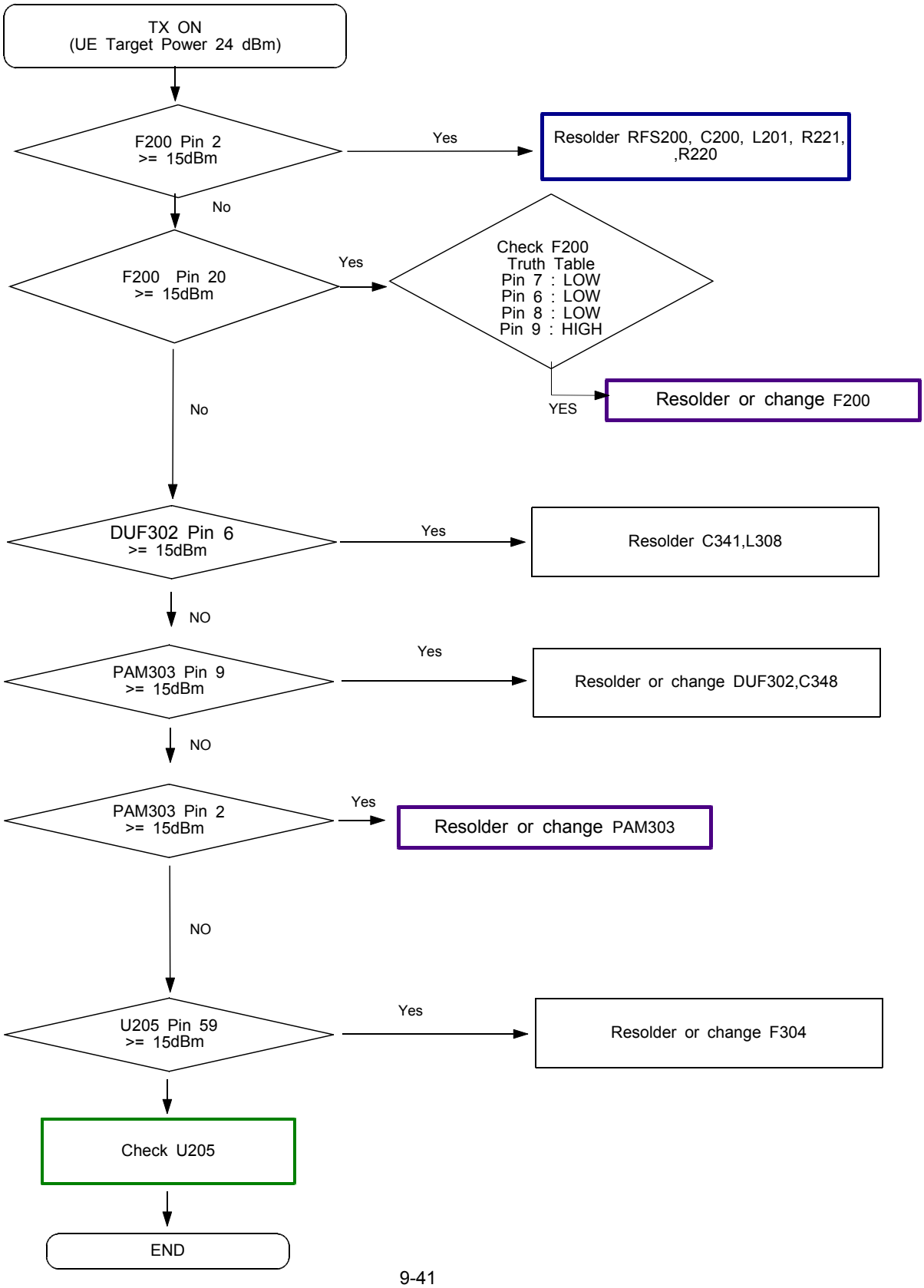

SAMSUNG Proprietary-Contents may change without notice
This Document can not be used without Samsung's authorization

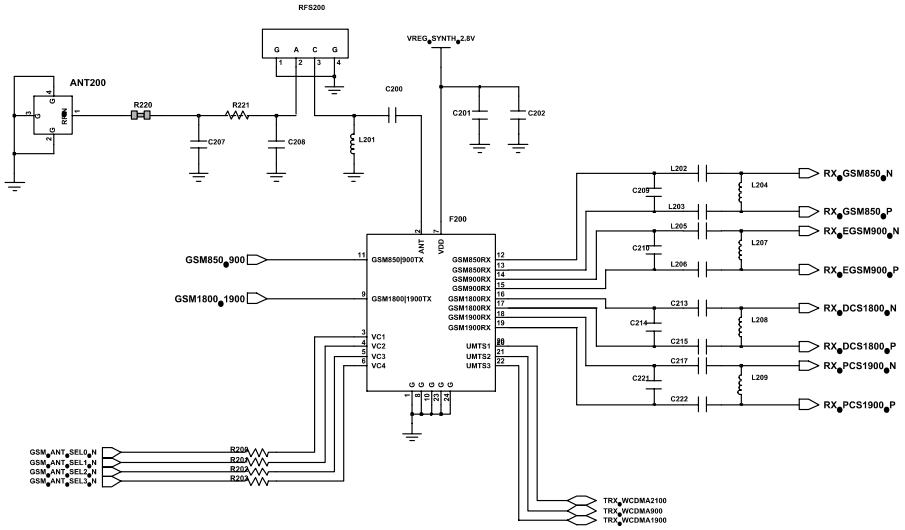

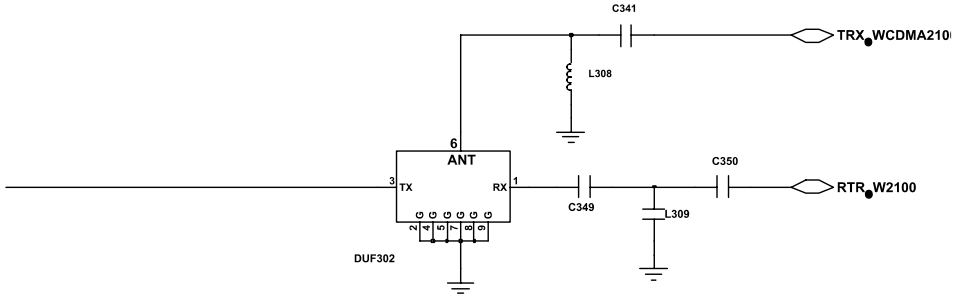

SAMSUNG Proprietary-Contents may change without notice
This Document can not be used without Samsung's authorization

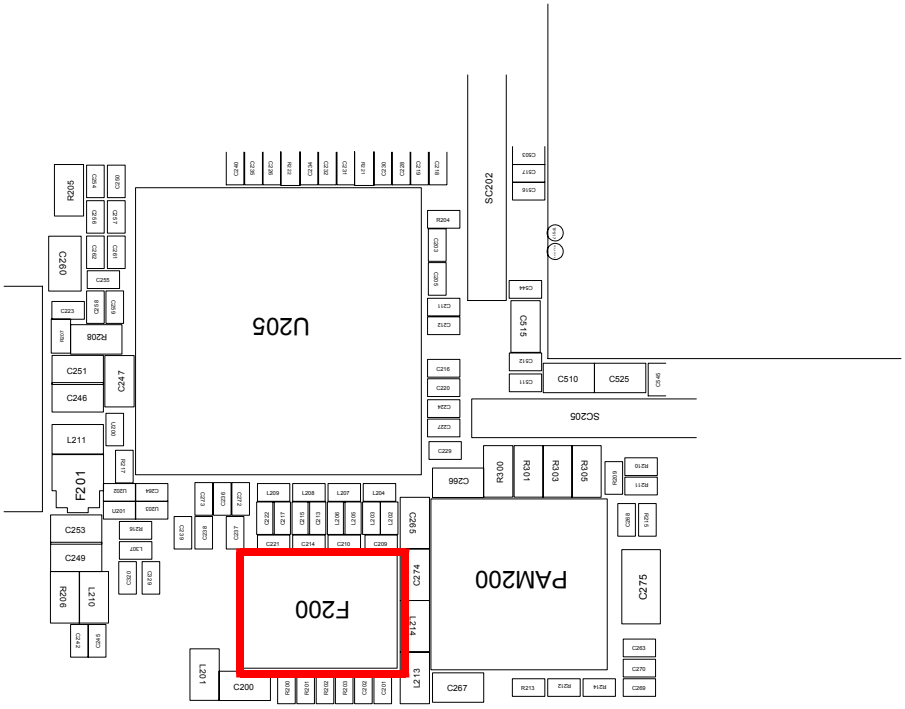

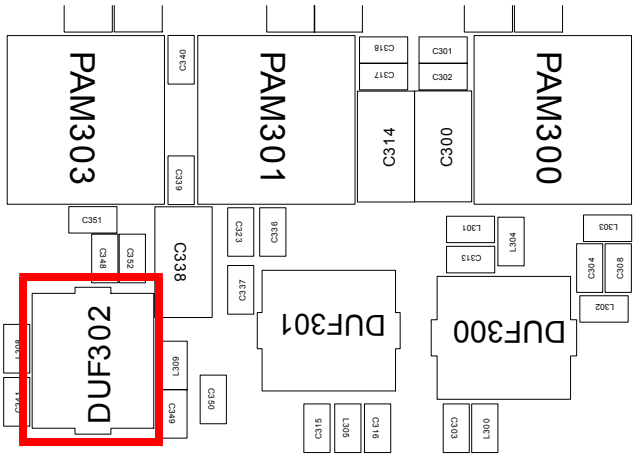

SAMSUNG Proprietary-Contents may change without notice
This Document can not be used without Samsung's authorization

9-18. WCDMA 1900 Receiver

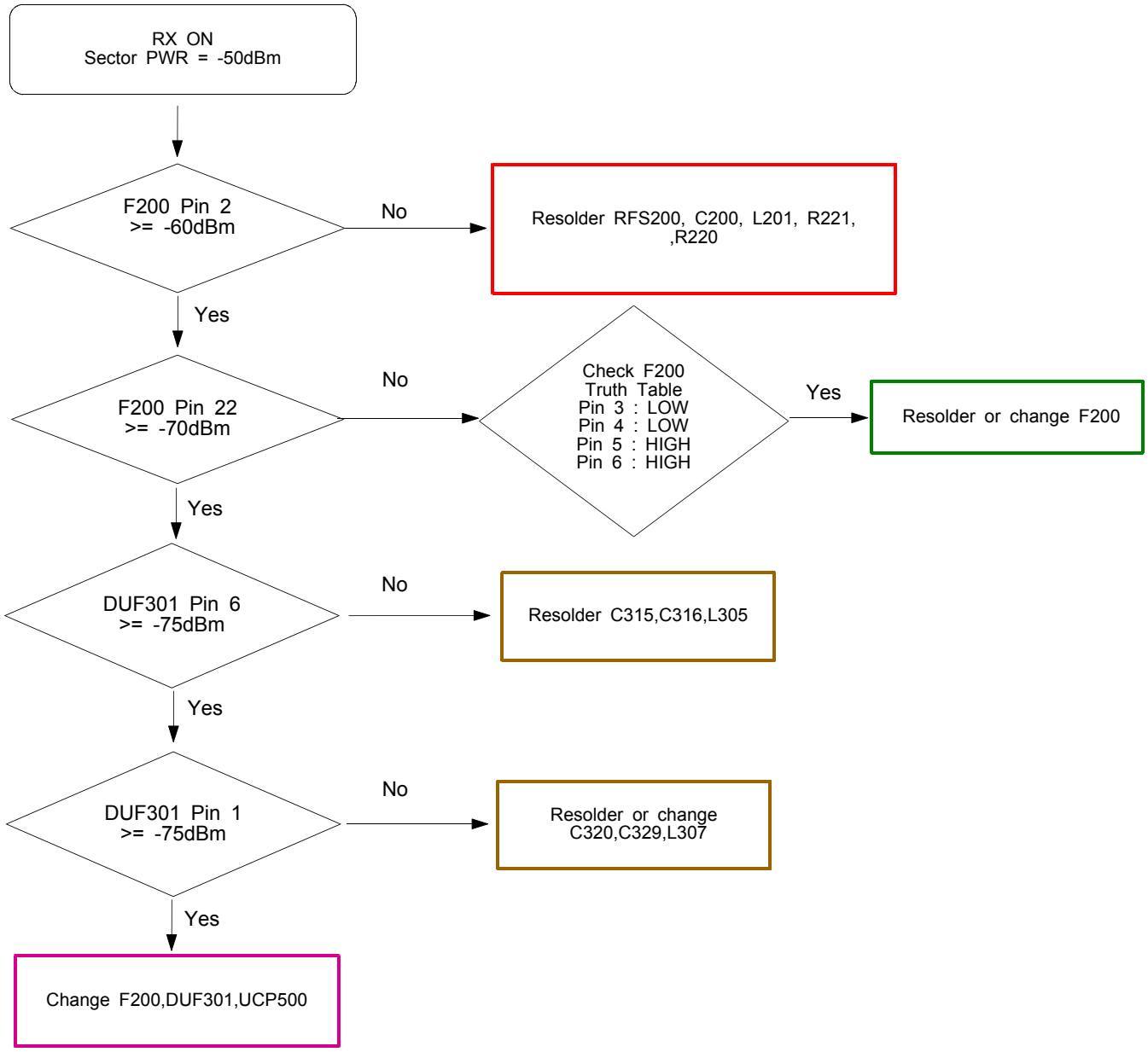

SAMSUNG Proprietary-Contents may change without notice
This Document can not be used without Samsung's authorization

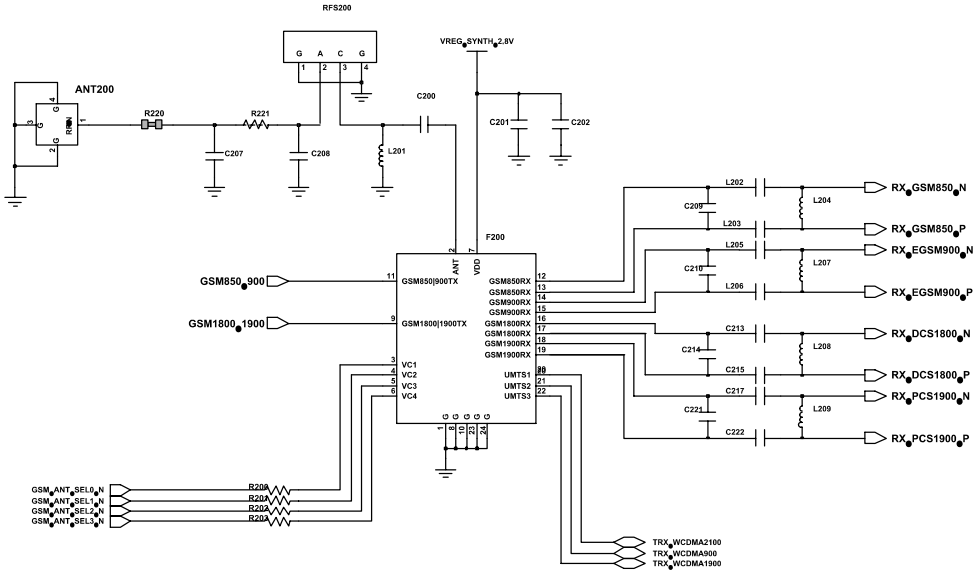

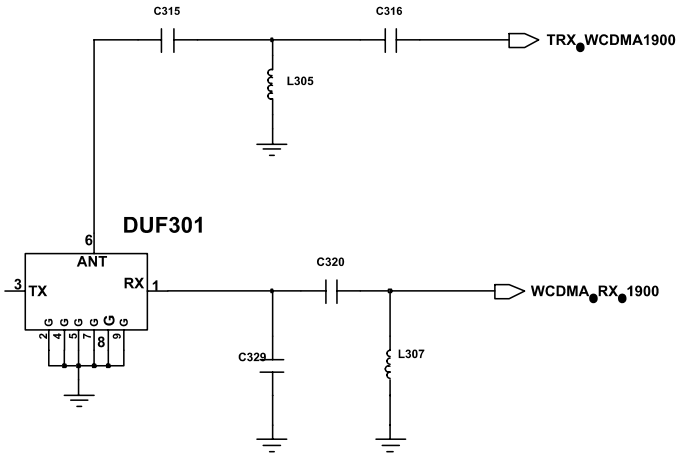

SAMSUNG Proprietary-Contents may change without notice
This Document can not be used without Samsung's authorization

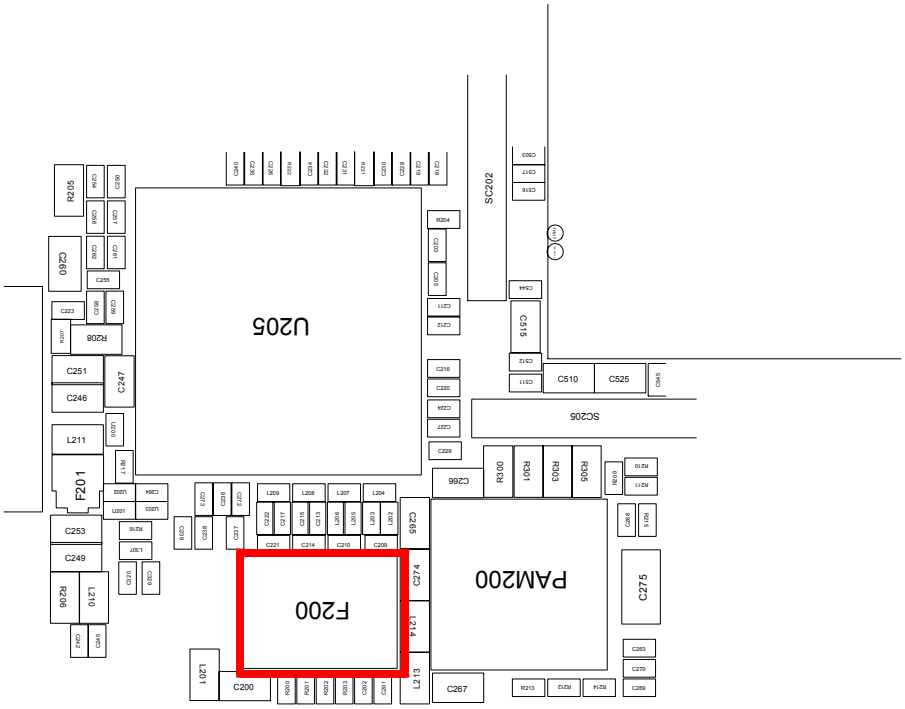

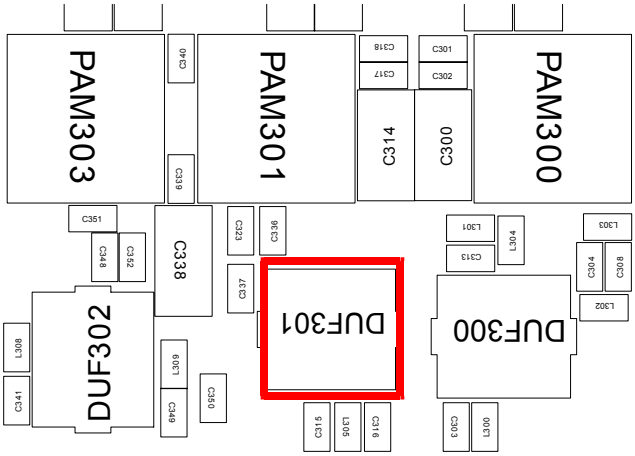

SAMSUNG Proprietary-Contents may change without notice
This Document can not be used without Samsung's authorization

9-19. WCDMA 1900 Transmitter

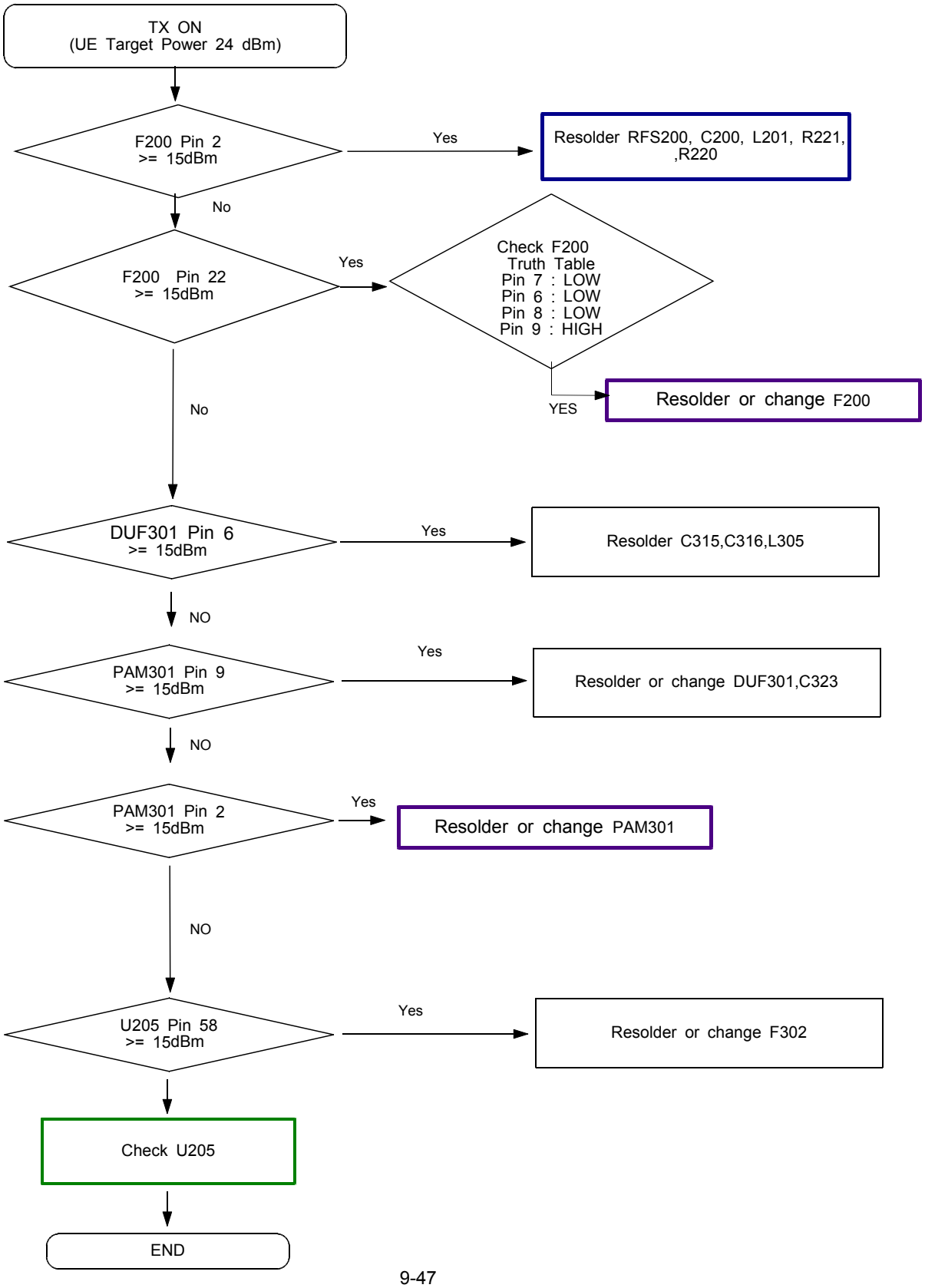

SAMSUNG Proprietary-Contents may change without notice
This Document can not be used without Samsung's authorization

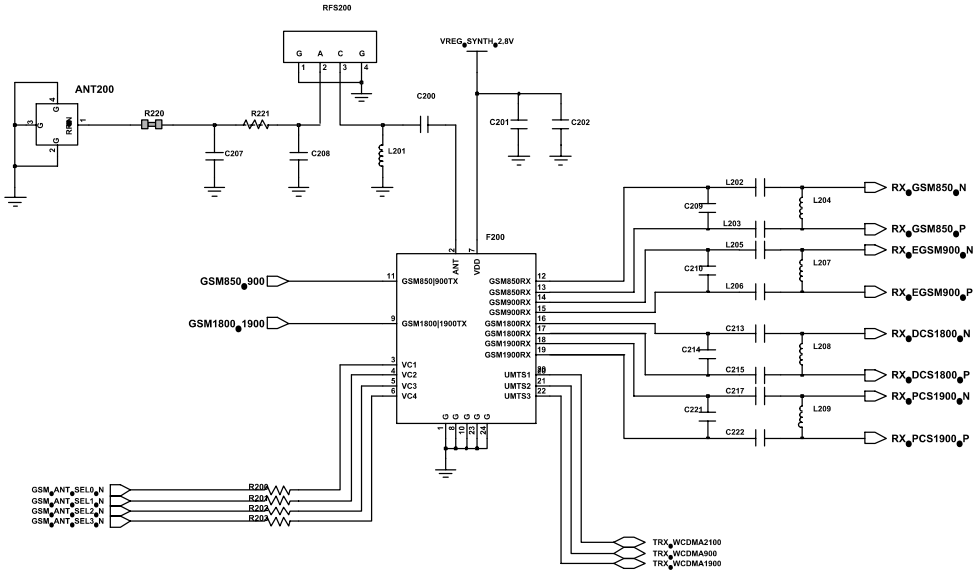

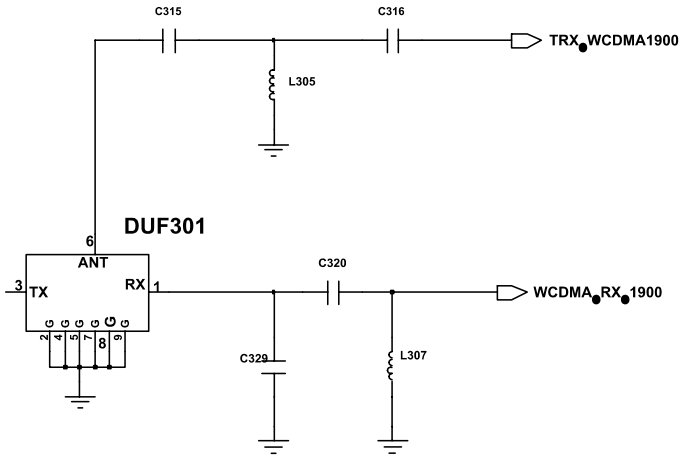

SAMSUNG Proprietary-Contents may change without notice
This Document can not be used without Samsung's authorization

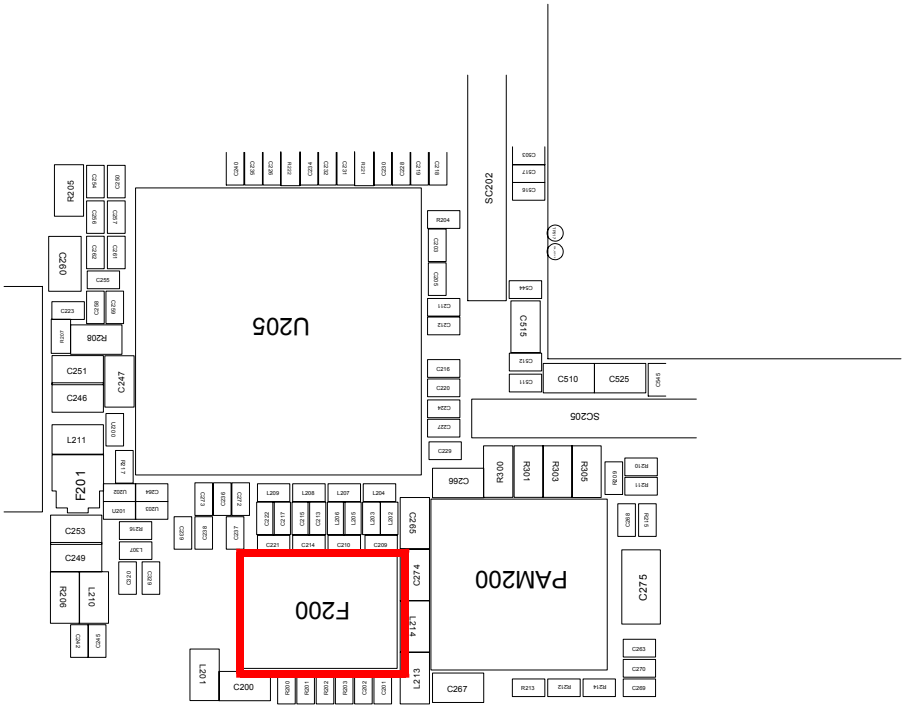
F200
PAM200
U205
SC202
SC206
F201
C200
C201
C202
C203
C204
C205
C206
C207
C208
C209
C210
C211
C212
C213
C214
C215
C216
C217
C218
C219
C220
C221
C222
C223
C224
C225
C226
C227
C228
C229
C230
C231
C232
C233
C234
C235
C236
C237
C238
C239
C240
C241
C242
C243
C244
C245
C246
C247
C249
C251
C253
C255
C260
C263
C264
C265
C266
C267
C269
C270
C274
C275
C510
C515
C525
L201
L203
L204
L205
L206
L207
L208
L209
L210
L211
L213
L214
L710
R201
R203
R204
R205
R206
R208
R210
R211
R212
R213
R214
R216
R300
R301
R302
R303
R304
R305
R306
R307
R308
R309
R310
R311
R312
R313
R314
R315
R316
R317
R318
R319
R320
R321
R322
R323
R324
R325
R326
R327
R328
R329
R330
R331
R332
R333
R334
R335
R336
R337
R338
R339

9-20. WCDMA 900 Receiver

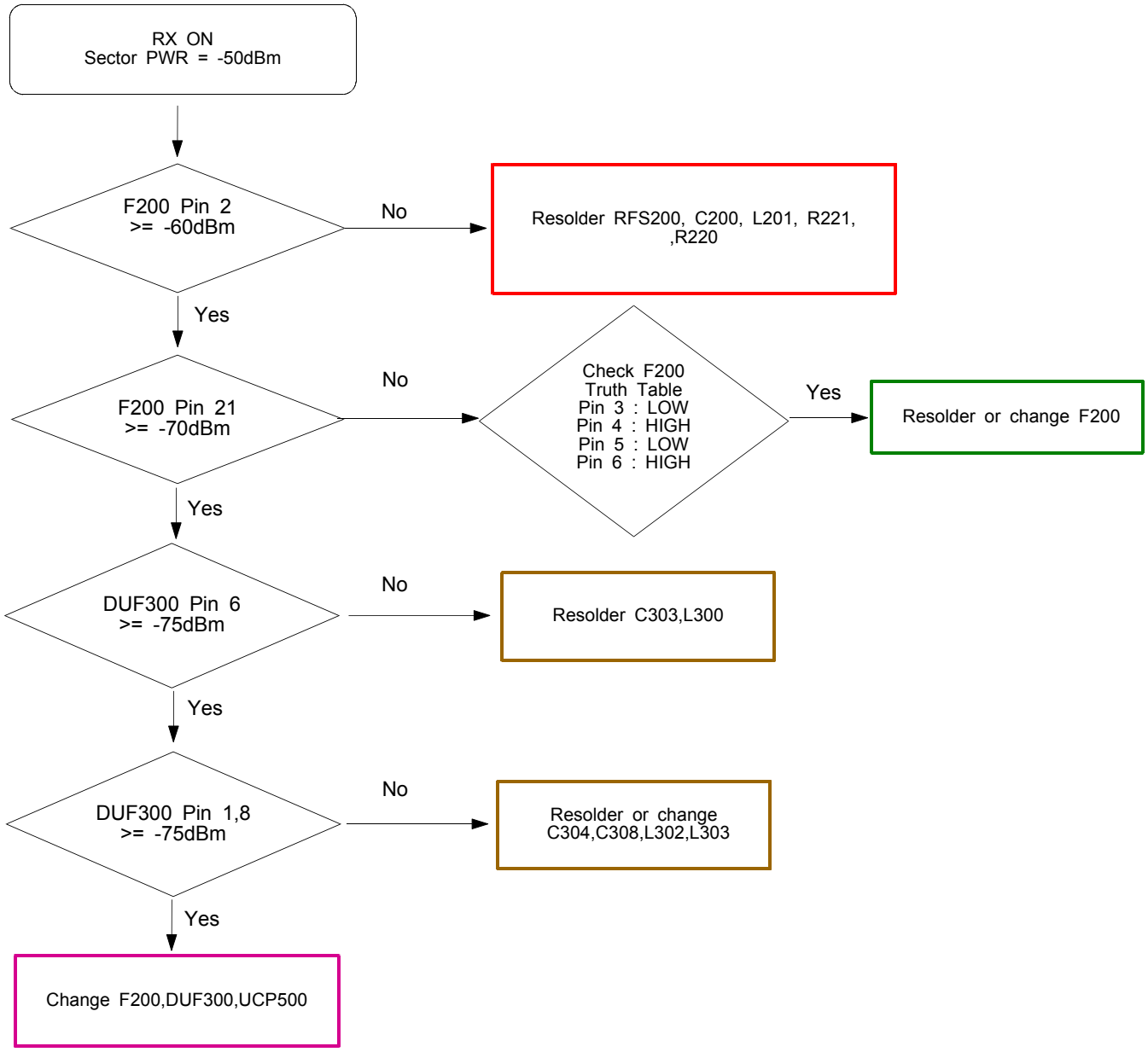

SAMSUNG Proprietary-Contents may change without notice
This Document can not be used without Samsung's authorization

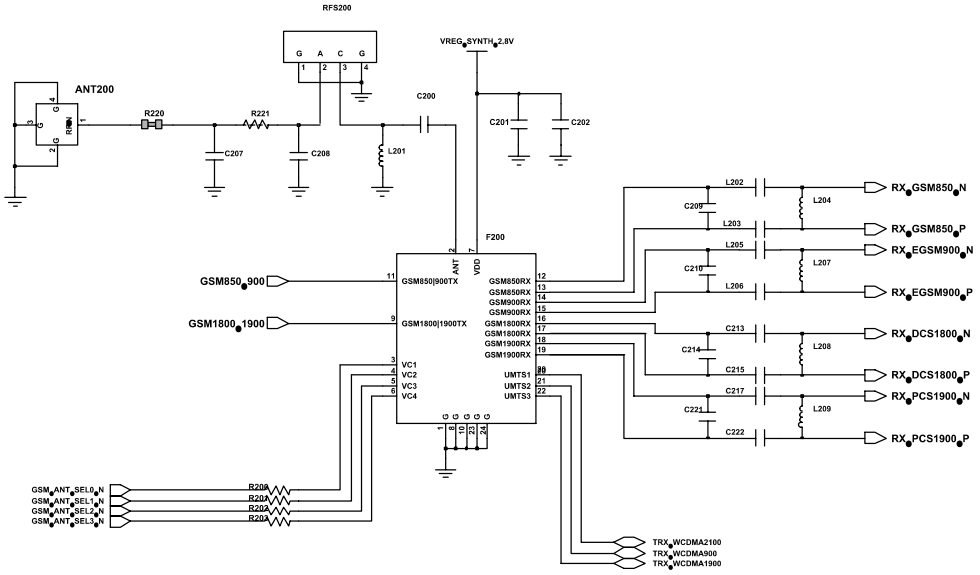

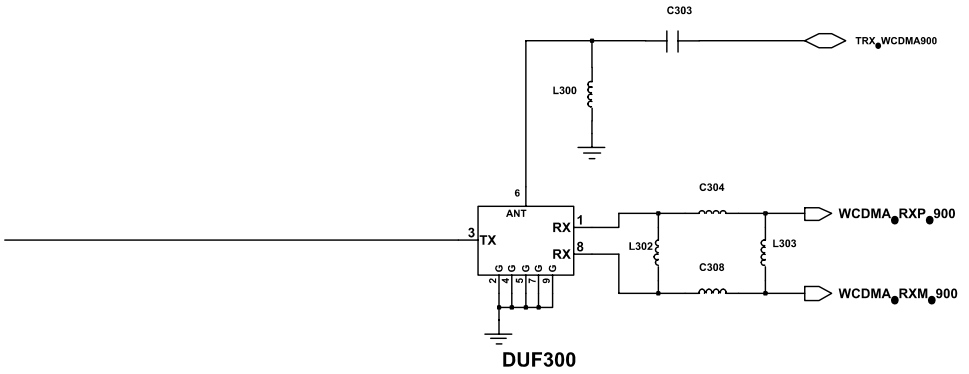

SAMSUNG Proprietary-Contents may change without notice
This Document can not be used without Samsung's authorization

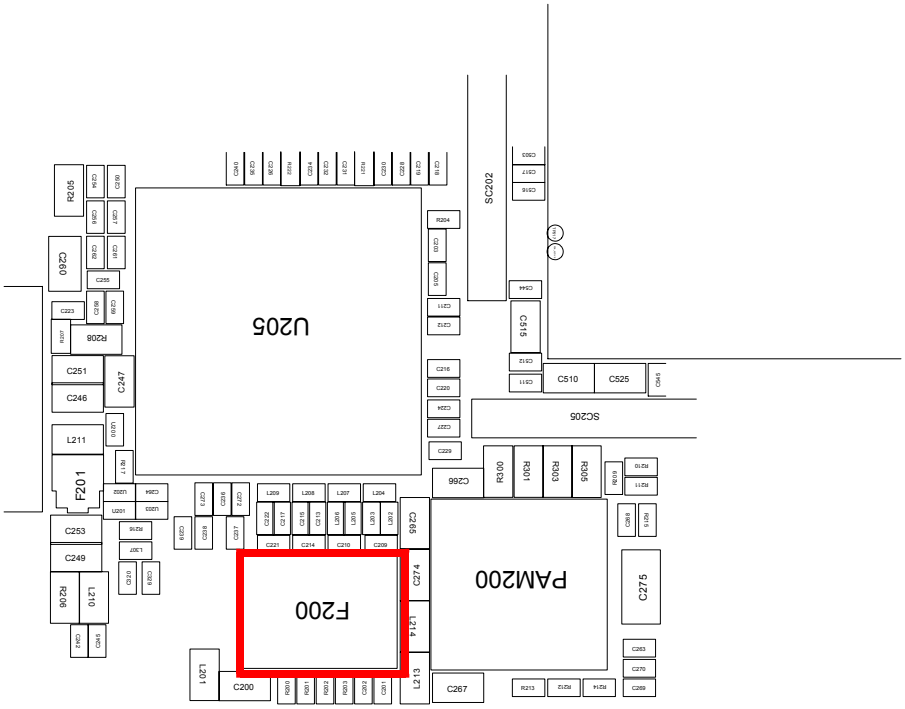

SAMSUNG Proprietary-Contents may change without notice
This Document can not be used without Samsung's authorization

9-21. WCDMA 900 Transmitter

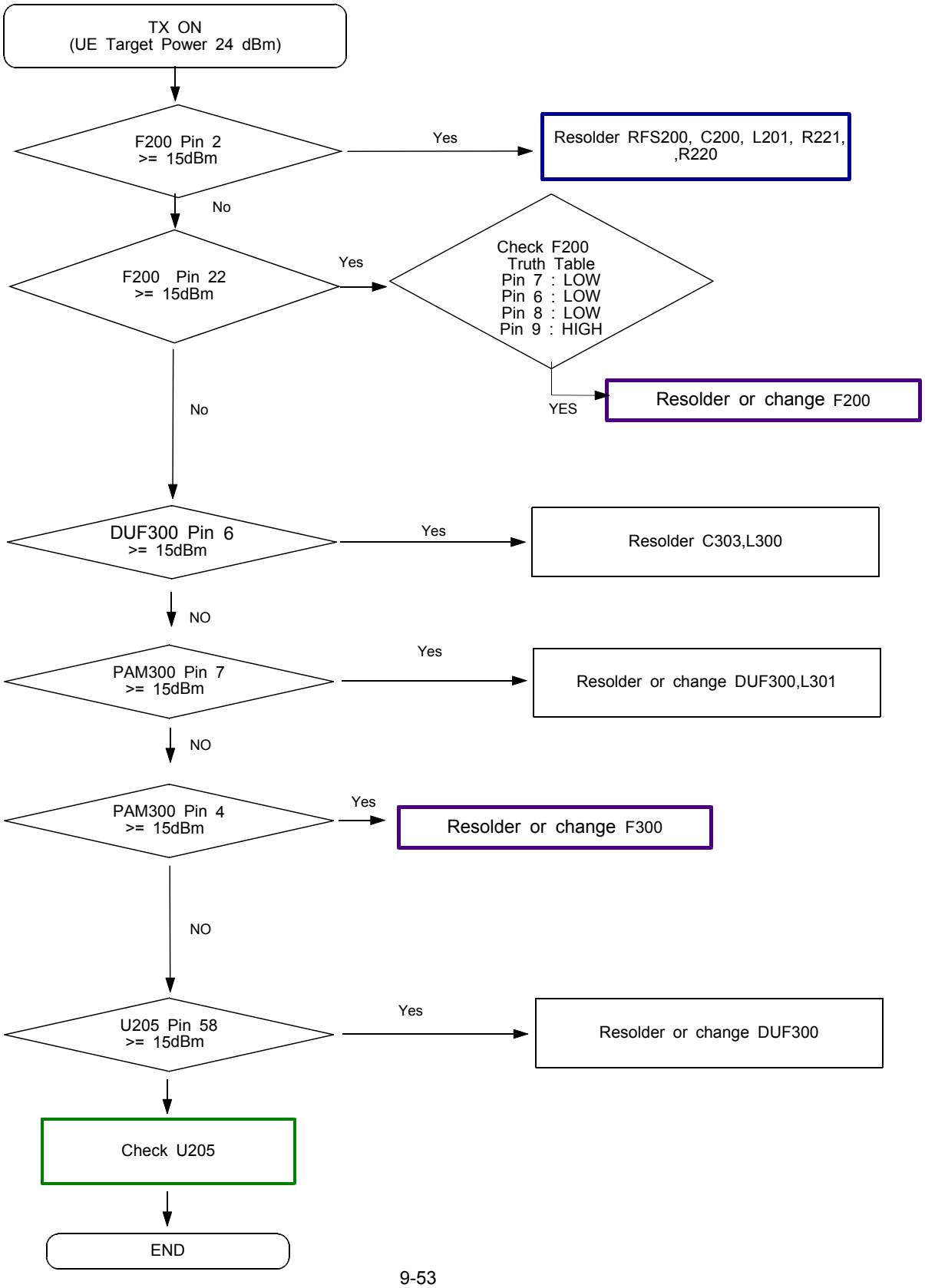

SAMSUNG Proprietary-Contents may change without notice
This Document can not be used without Samsung's authorization

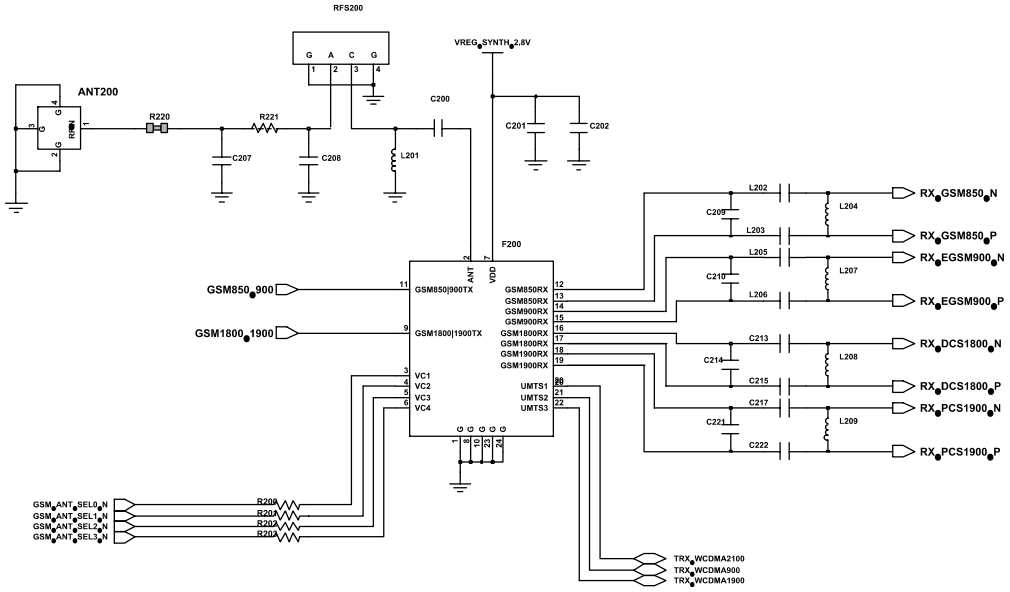

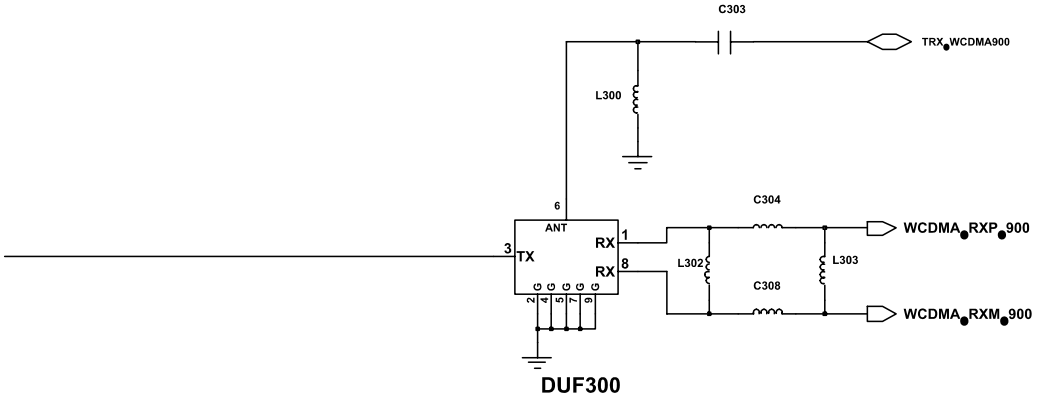

SAMSUNG Proprietary-Contents may change without notice
This Document can not be used without Samsung's authorization

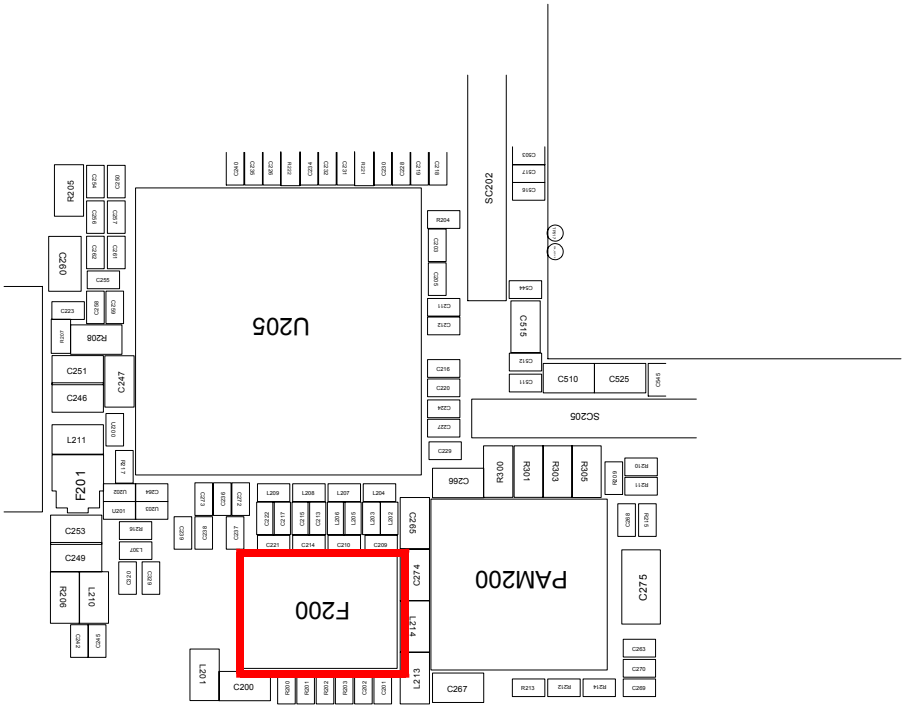

SAMSUNG Proprietary-Contents may change without notice
This Document can not be used without Samsung's authorization

7-1. Block Diagram

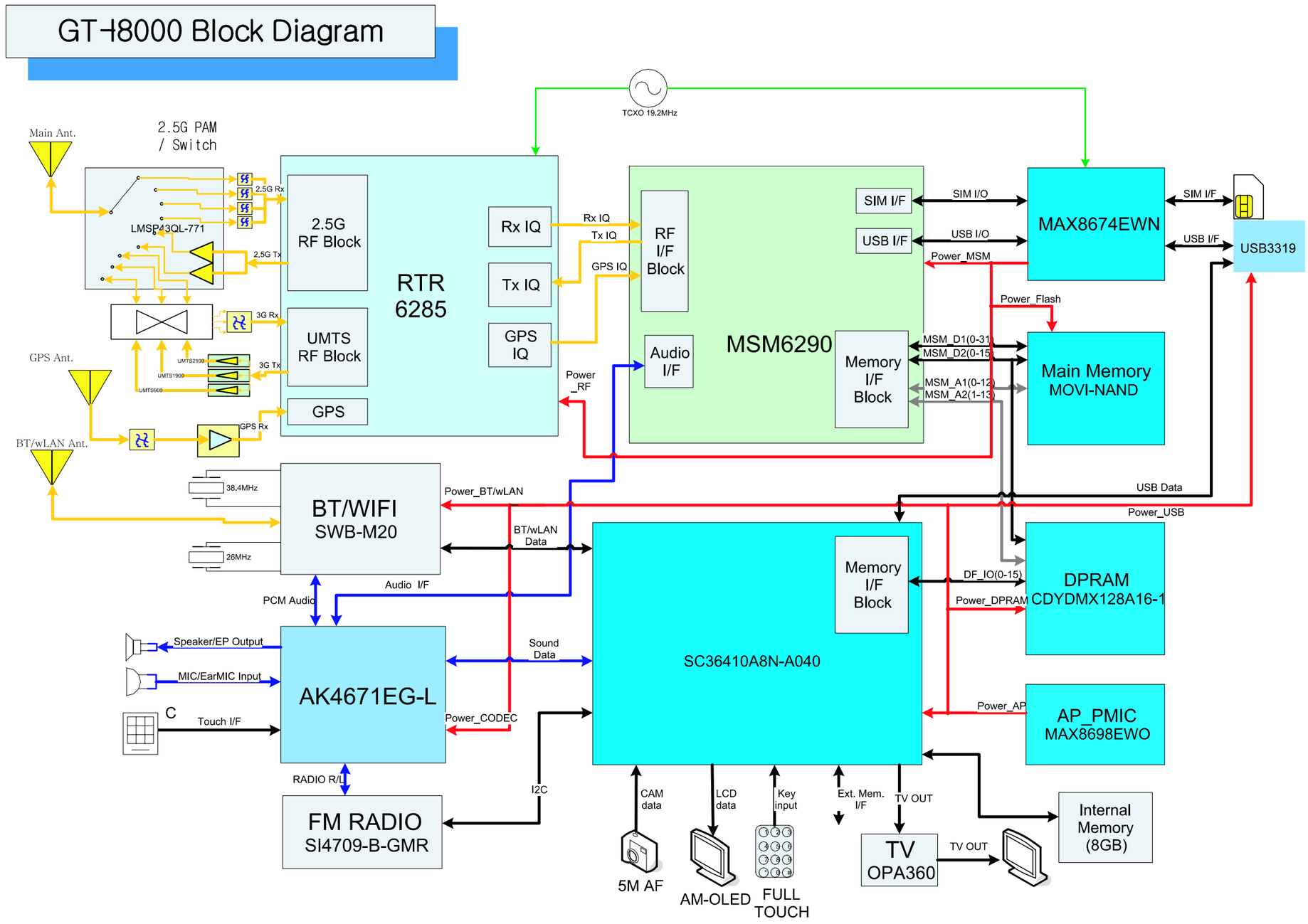

SAMSUNG Proprietary-Contents may change without notice
This Document can not be used without Samsung's authorization

8. PCB Diagrams

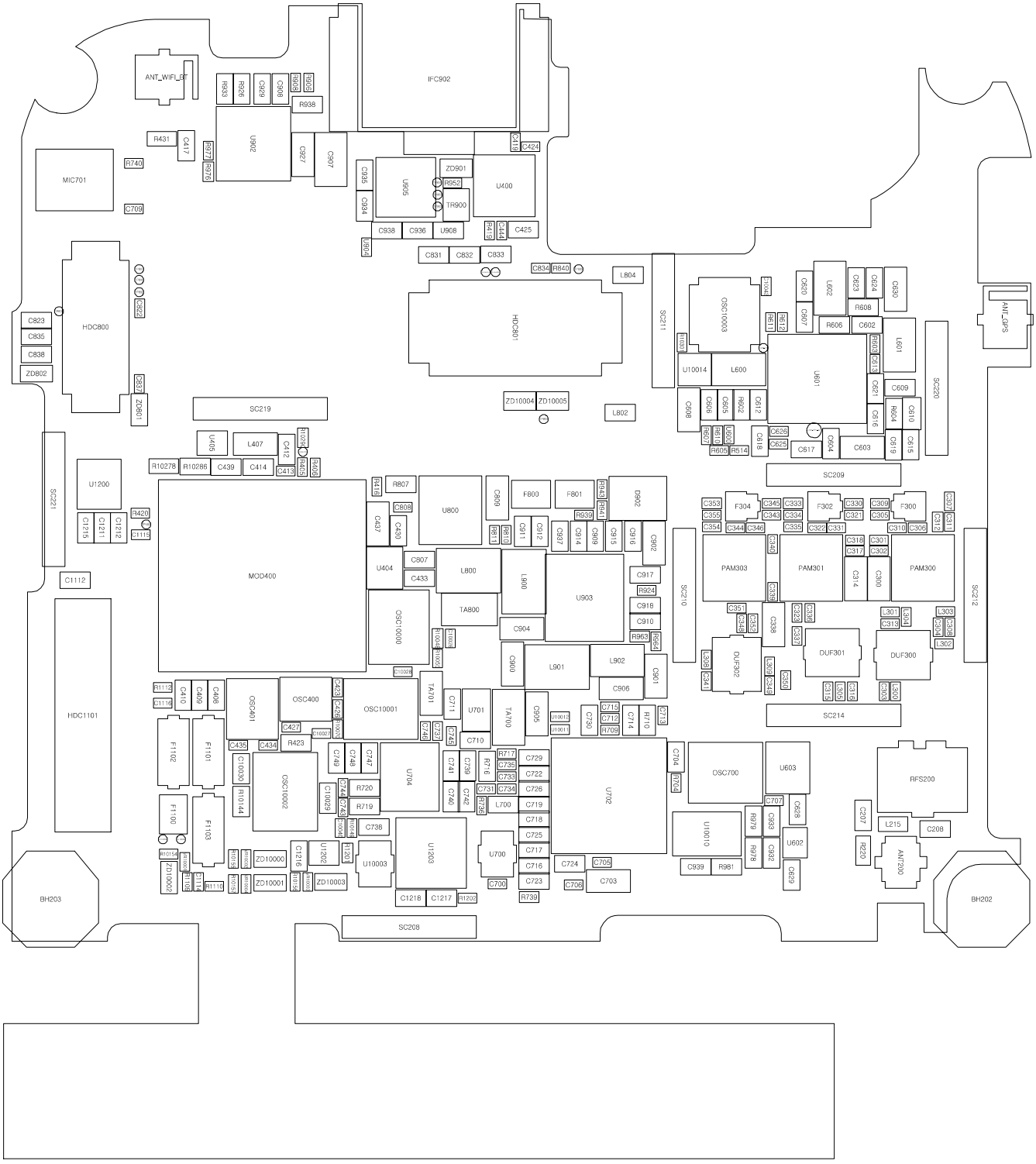

SAMSUNG Proprietary-Contents may change without notice
This Document can not be used without Samsung's authorization

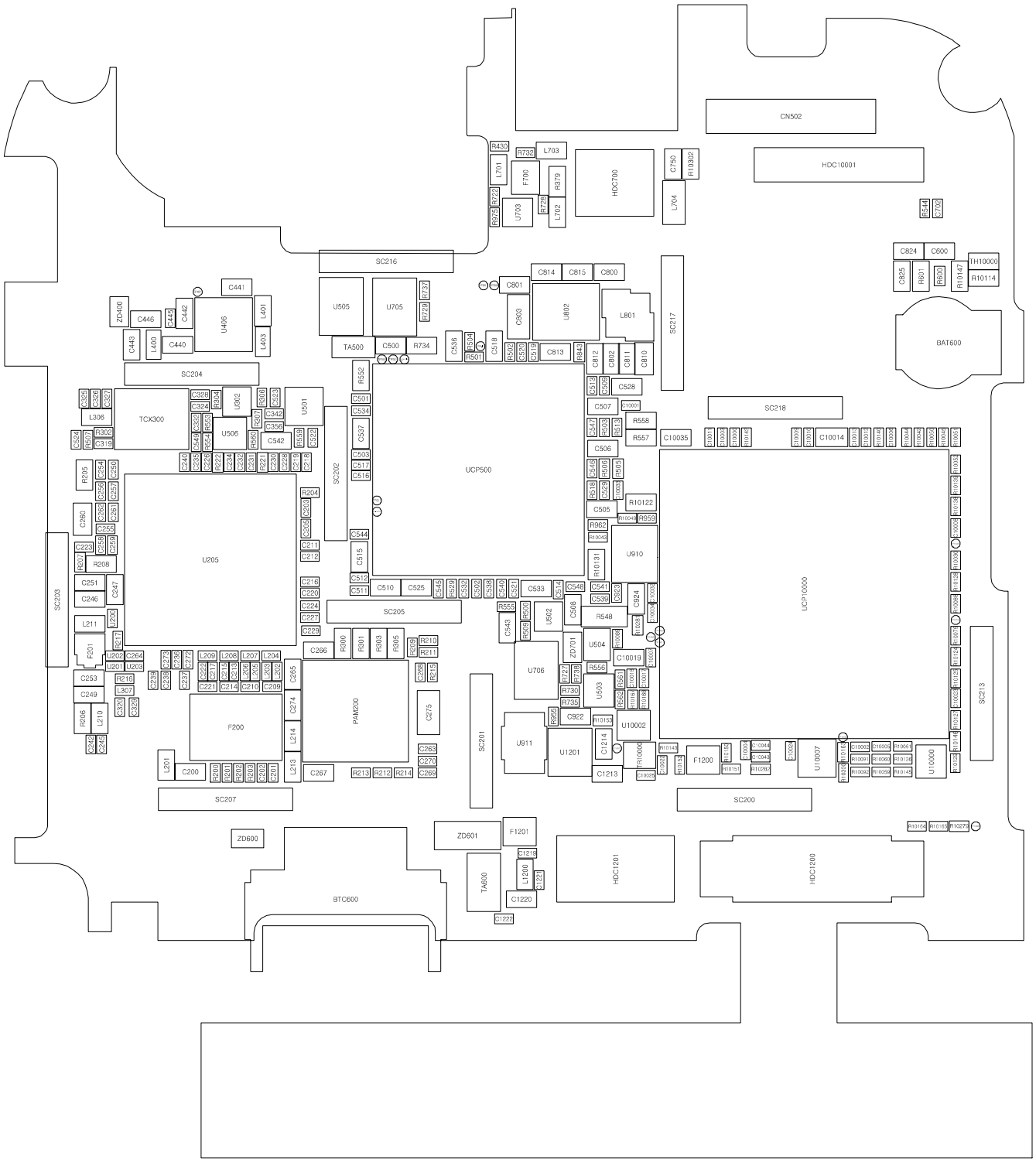

SAMSUNG Proprietary-Contents may change without notice
This Document can not be used without Samsung's authorization